Зип Общепит
vsezip.ru
+7(812)987-08-81

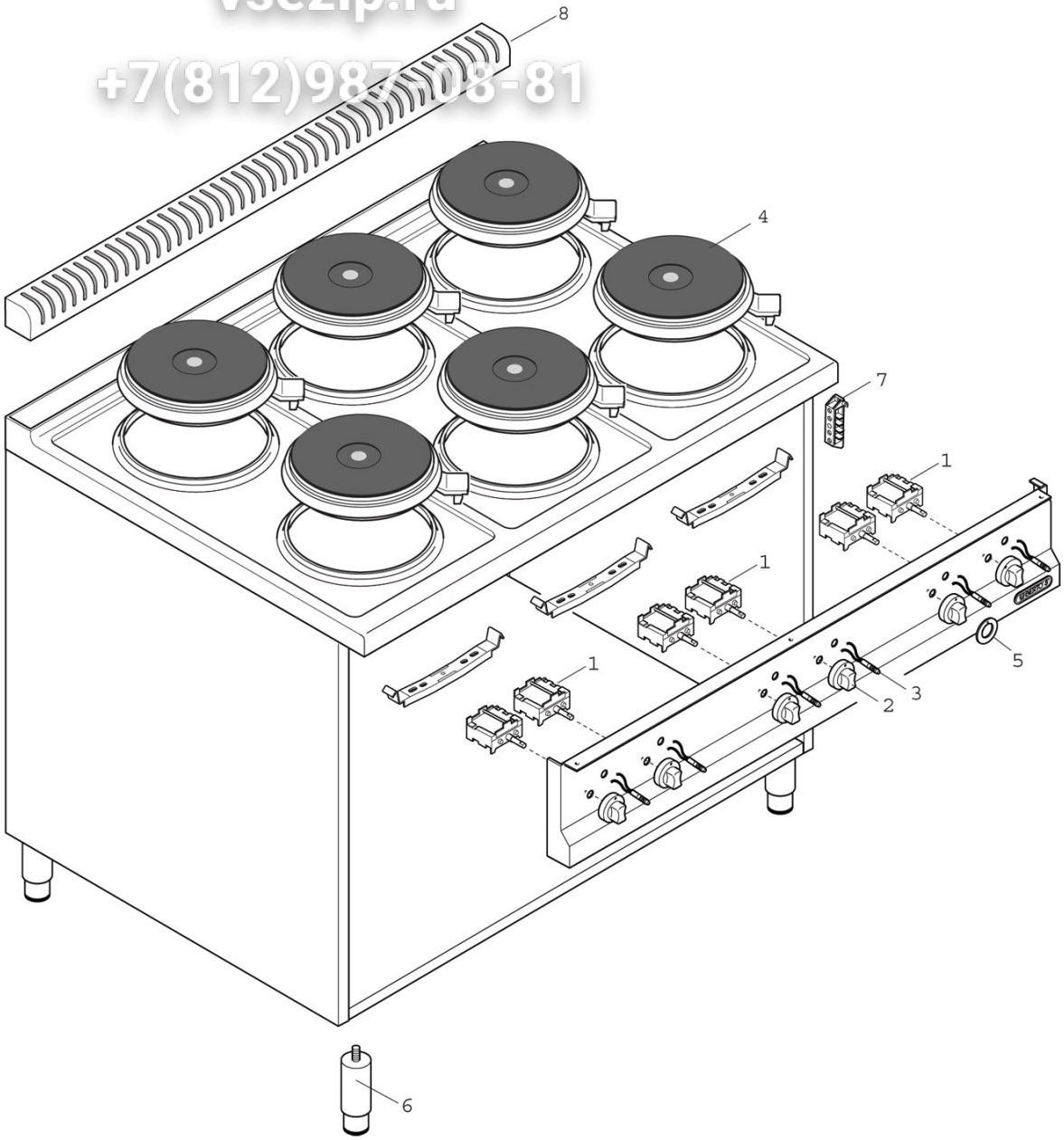

E9P2M

Зип Общепит
vsezip.ru
+7(812)987-08-81

Pos. Item	Codice Code	Descrizione	Item Description	Designation articles	Artikelbeschreibung	Decripciòn artìculos	N° pezzi - No. pieces					
1	22049900	Commutat. x cuc.piastre el. s.	Selector	Commutateur	Umschalter	Conmutador						2
2	35877100	Manopola rossa p. 8x6,5 a 180°	Red knob p. 8x6,5 a 180°ral300	Manette rouge p. 8x6,5 a 180°	Drehknopf p. 8x6,5 a 180°ral30	Mando rojo p. 8x6,5 a 180°ral3						2
2	35876100	Manopola rossa p. 8x6,5 a 180°	Red knob 8x6,5 180°	Manette rouge 8x6,5 180°	Drehknopf 8x6,5 180°	Mando rojo 8x6,5 180°						2
3	30168800	Spia verde 230v d.10mmt150Ø	Green lamp 230v	Temoin lumineux vert 230v	Grune kontrollampe 230v	Piloto verde 230v						2
4	35037800	Piastra tonda d.300 3500w 230v	Round plate	Plaque ronde	Rundplatte	Plancha retonda						2
5	31952500	Serig.rossa manop.cucina elet.	Electric knob serigraphy	Serigraphie manette electr.	Drehknopfserigraphie	Serigrafia mando electr.						2
6	24684500	Piedino inox 2 h-125/175	Foot 2 h-125/175	Pied 2 h-125/175	Stellfuss 2 h-125/175	Pata 2 h-125/175						4
7	30184200	Morsettiera a 6 poli fv 122 b	Terminal board 6 poles	Bornier 6 poles	Klemmenleiste	Bornera 6 polos						1
8	35857300	Ass. griglia camino 400 aisi 3	400 chimney grill	Grille hotte 400	Grill kamin 400	Parrilla chimenea 400						1
8	35856100	Ass. griglia camino 800 aisi 3	Chimney grill 800 aisi 304 12/	Grille hotte 800 aisi 304 12/1	Grill kamin 800 aisi 304 12/10	Parrilla chimenea 800 aisi 304						-
8	35856300	Ass. griglia camino 1200 aisi	Chimney grill 1200 aisi 304 12	Grille hotte 1200 aisi 304 12/	Grill kamin 1200 aisi 304 12/1	Parrilla chimenea 1200 aisi 30						-