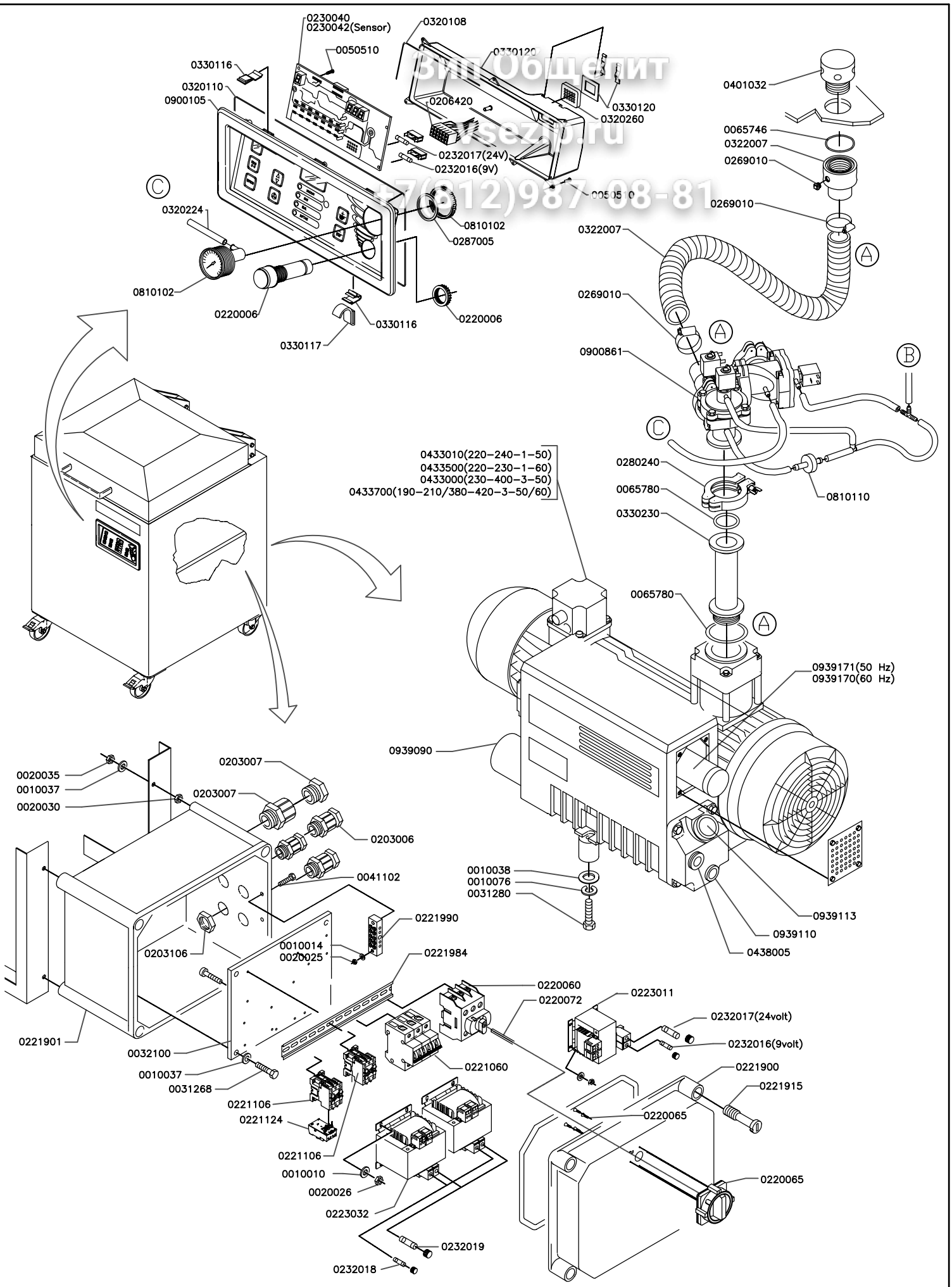

БИП Общепит
vsezip.ru
+7(812)987-08-81

Scale:	Name:	Exploded View POLAR 52
Date: Jan 2009		
Drawn by: MD		
HENKELMAN B.V. P.O. box 2117 5202 CC 's-Hertogenbosch Tel. ++31(0)73 – 6213671 Fax ++31(0)73 – 6221318 The Netherlands	A 4	Drawing: Page 1-2
		Rev, no: 050

Ownership explicitly reserved. Multiplication or information to third – parties in any form is not permitted without written permission of the owner.

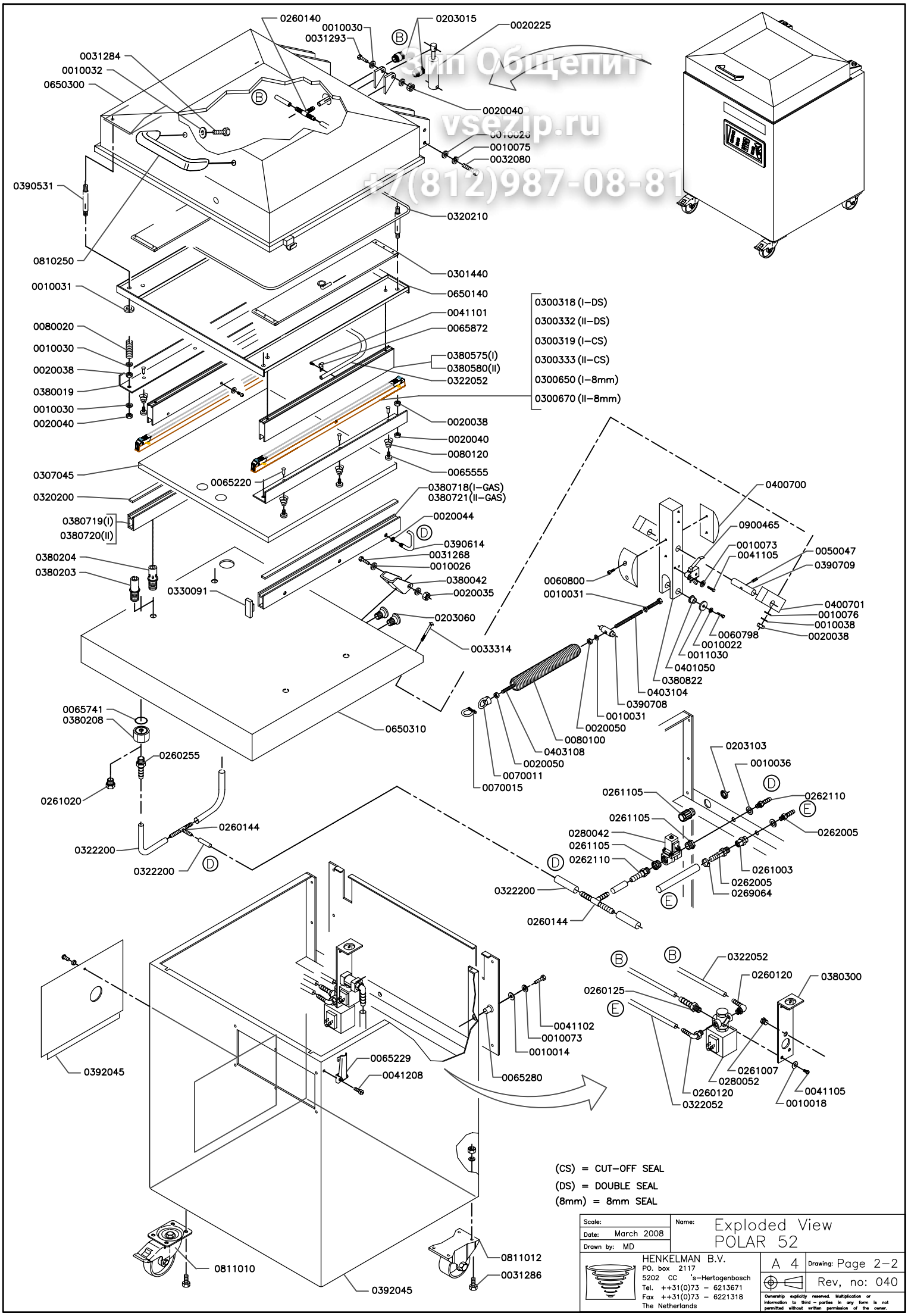

Завод Общепит
vsezip.ru
+7(812)987-08-81