CME1356 and CME1656 Service Parts

Зип Общения
vsezip.ru
+7(812)987-08-81

This parts list contains the part numbers and description of the replacement parts available for these two models.

They have been manufactured in both 50 Hz and 60 Hz models, plus there have been model series changes from A to C to D to E to F to H.

To avoid costly and time consuming errors, double check the model and voltage before ordering a part.

Table of Contents

Cabinet . . . . . page 2

Water System . . . . . page 3

Air Cooled Refrigeration System . . . . . page 4

Water Cooled Refrigeration System . . . . . page 5

Electrical . . . . . page 6

BH900 . . . . . page 7

BH1356 . . . . . page 8

Kit Parts . . . . . page 9

Wiring Diagrams . . . . . page 10

CME1356 and CME1656 Service Parts

Cabinet

ЗИП ОБЩЕНИЕ
vsezip.ru
+7(812)987-08-81

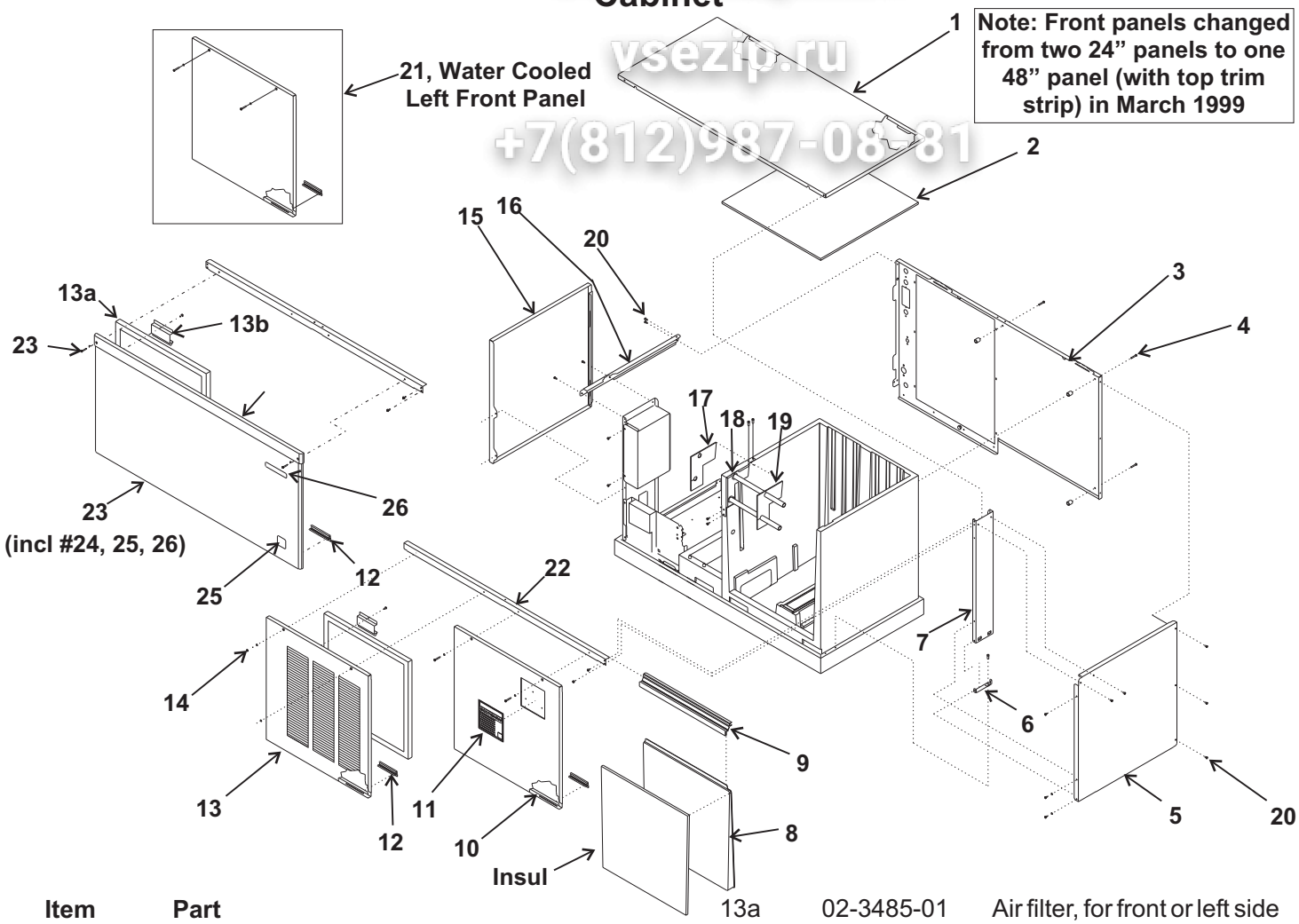

Item Number	Part Number	Description
1	A37202-015	Top panel, Grey
	A37202-002	Top panel, SS
	02-3823-21	Top panel, plastic for C - H series.
		Will not fit A or B series.
2	02-3686-01	Insulation
3	A37197-001	Back pnl - for wc A & B
	A37196-001	Back pnl - for ac A & B
	A37670-001	Back pnl for AC C - H
	A37669-001	Back pnl for WC C - H
4	03-1404-37	Screw
5	A37199-015	Rt side panel, grey, A & B
	A37199-002	Rt side panel, SS, A & B
	A37668-001	Rt side panel, C - H series
6	A37194-001	Right bottom channel
7	A37213-001	Right side support
8	02-3702-21	Evaporator cover, incl insul
9	02-3701-01	Cover retainer
10	A37200-015	24” Right front panel, grey
	A37200-002	24” Right front panel, SS
11	15-0808-01	Emblem
12	02-3699-01	Panel support clip
13	A37262-015	24” Left front panel AC - grey
	A37262-002	24” Left front panel, AC -SS
13a	02-3485-01	Air filter, for front or left side
13b	A37326-001	Filter bracket (either)
14	03-1728-01	Front panel screw
15	A37198-015	Left side panel, no louvers grey
	A37198-002	Left side panel, no louvers SS
	A38025-001	Left side panel, louvered for Air cooled E & F & H series
16	A37193-001	Left side channel
17	02-3696-03	Left grommet
18	A37216-001	Bracket
19	02-3696-02	Right grommet
20	03-1531-01	Screw
21	A37201-015	24” Left front panel, grey
	A37201-002	24” Left front panel, SS
22	A37195-001	Top front channel
23	A37489-001	SS 48” panel w/o louvers
	A37489-002	Grey 48” panel w/o louvers
	A37489-003	SS 48” panel with louvers
	A37489-004	Grey 48” panel with louvers
23a	03-1735-01	Screw
24	02-3794-02	Trim strip
	03-1731-02	Push nut
25	15-0792-01	CM3 emblem
26	15-0711-02	Scotsman emblem
	03-0271-00	Nut for emblems #25 & 26

CME1356 and CME1656 Service Parts

Water System

Зип Общепит
vsezip.ru
+7(812)987-08-81

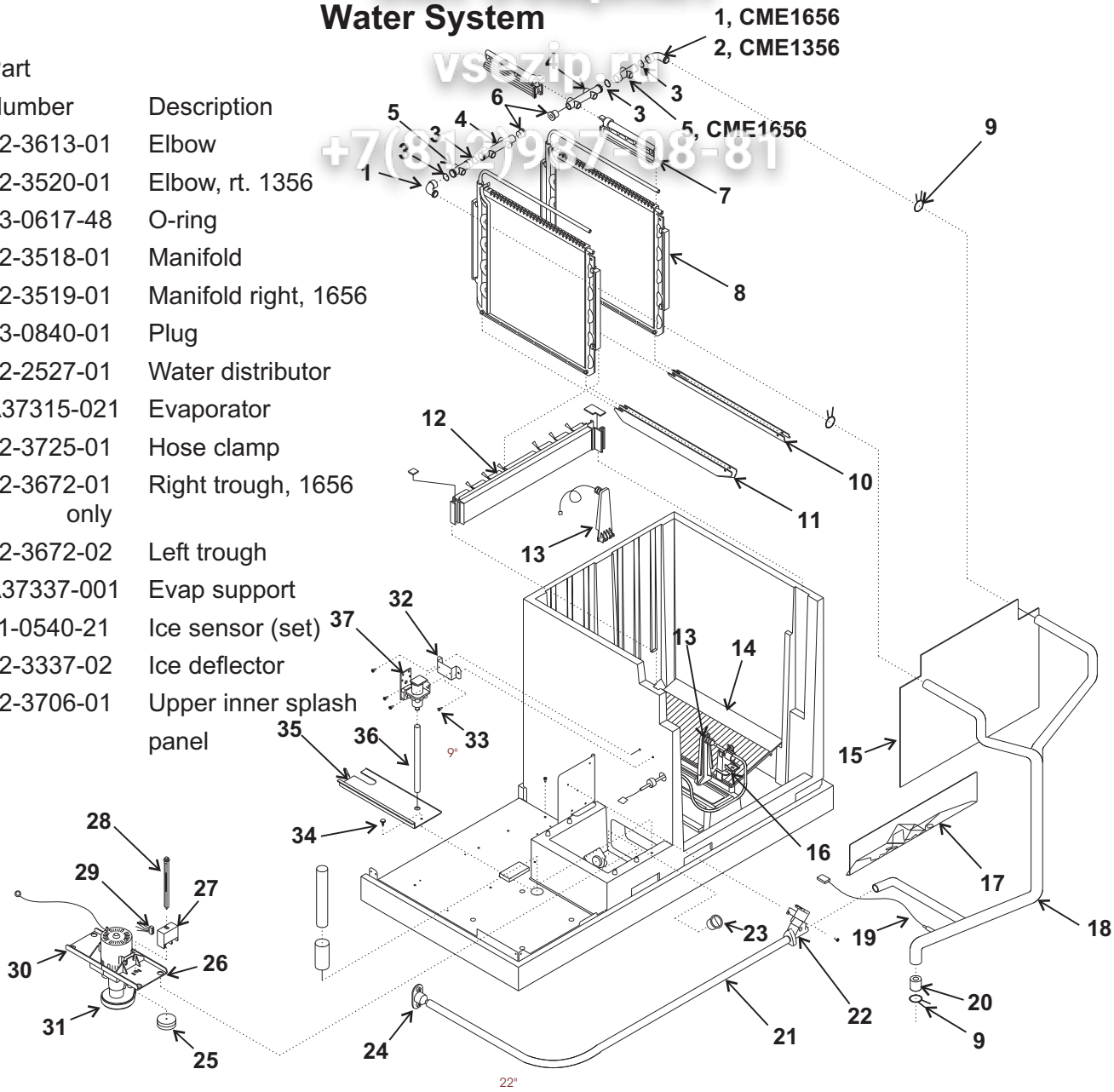

Item Number	Part Number	Description
1	02-3613-01	Elbow
2	02-3520-01	Elbow, rt. 1356
3	13-0617-48	O-ring
4	02-3518-01	Manifold
5	02-3519-01	Manifold right, 1656
6	13-0840-01	Plug
7	02-2527-01	Water distributor
8	A37315-021	Evaporator
9	02-3725-01	Hose clamp
10	02-3672-01 only	Right trough, 1656
11	02-3672-02	Left trough
12	A37337-001	Evap support
13	11-0540-21	Ice sensor (set)
14	02-3337-02	Ice deflector
15	02-3706-01	Upper inner splash panel
16	02-3689-01	Ice sensor holder
17	02-3680-01	Lower inner splash panel
18	02-3660-02	CME1356 water hose
	02-3660-01	CME1656 water hose
19	11-0515-21	Temp sensor set
20	02-3614-01	Flow restrictor, 1356 only no longer used
21	13-0674-06	Drain hose, order 2 units
22	11-0514-01	Purge valve
23	02-3703-01	Drain plug
24	02-3692-21	Drain fitting
25	02-3341-01	Float
26	02-3388-04	Pump bracket
27	11-0539-51	Water level sensor
28	02-3383-04	Float stem, tan for 1356
	02-3383-05	Float stem, brown for 1656
29	12-2665-01	Harness for water sensor
30	02-3388-05	Pump bracket
31	12-2582-21	Water pump
32	A37204-001	Bracket
33	03-1404-18	Screw
34	03-1691-01	Nylon screw
35	02-3534-01	Reservoir cover
36	13-0674-02	Tube, order 1 unit
37	12-2666-01	Inlet water valve
	16-0355-00	Coupling

CME1356 and CME1656 Service Parts

Air Cooled Refrigeration

Зип Общепит
vsezip.ru
+7(812)987-08-81

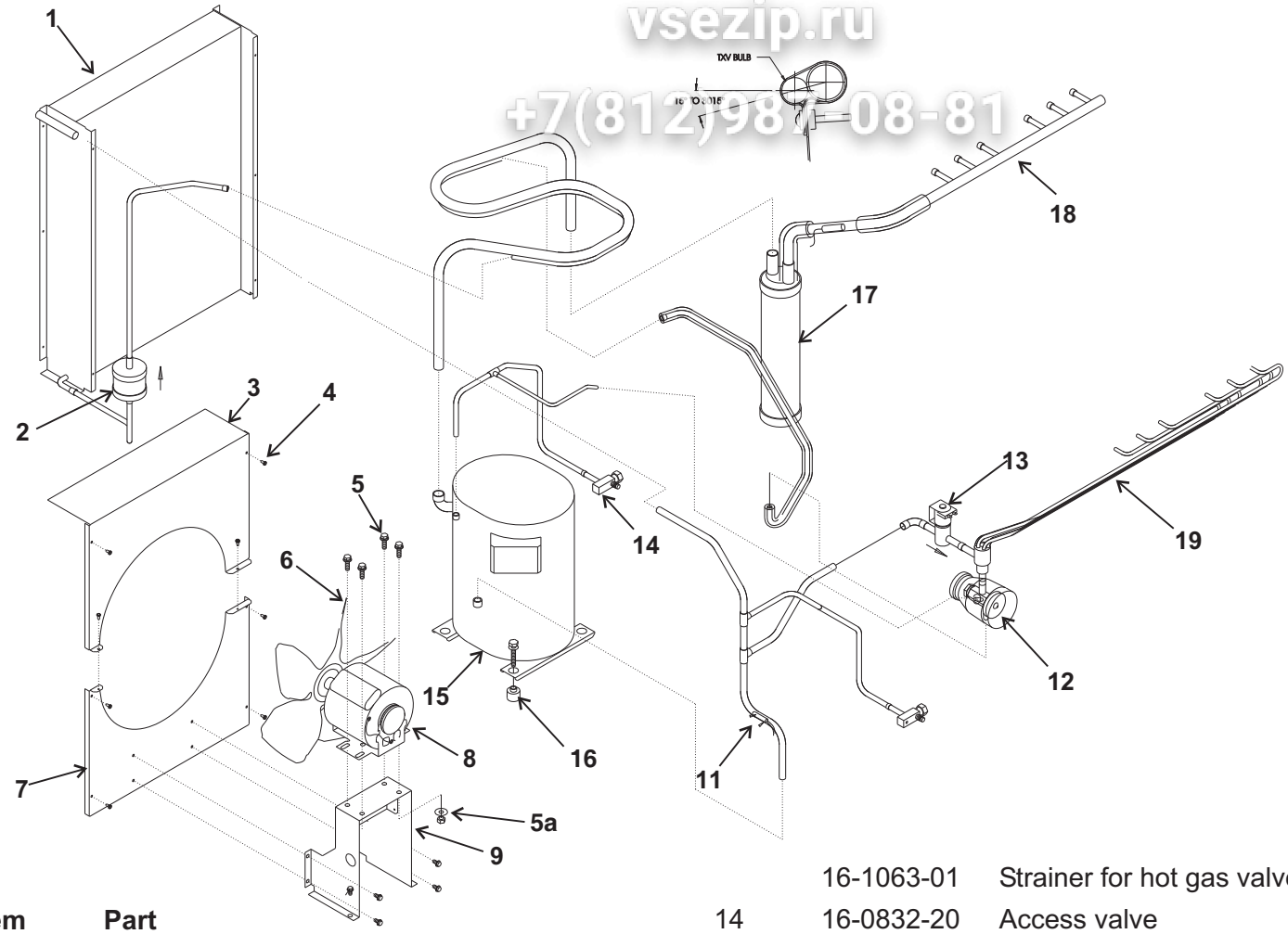

Item Number	Part Number	Description
1	18-8817-01	Air cooled condenser
2	02-3319-02	Filter dryer
3	A37205-001	Top fan shroud
4	03-1531-01	Screw
5	03-1251-01	Hex cap screw
5a	03-1406-10	Nut
6	18-8765-01	Fan blade
7	A37206-001	Bottom fan shroud
8	18-8818-01	Fan motor
9	A37207-001	Fan bracket
10	03-1645-01	Screw
11	11-0515-21	Temp sensor set
12	16-1066-21	TXV, ANE1 ¼ SZ
	02-3396-01	Insulation for TXV
13	11-0507-01	Hot gas valve, 1356
	11-0507-02	Hot gas valve, 1656
	12-2719-23	Coil for hot gas valve
	16-1063-01	Strainer for hot gas valve
14	16-0832-20	Access valve
	16-0832-03	Port cap
	16-0832-02	Stem cap
15	18-8751-23	Compressor, 60 Hz, single phase
	18-8751-25	Compressor, 60 Hz, 3 phase
	18-8751-27	Compressor, 50 Hz, single phas
16	18-2300-27	Grommet
	18-2200-27	Sleeve
	03-1405-20	Bolt
	03-1407-07	Washer
17	16-1031-21	Accumulator
18	16-1032-02	Suction manifold, 1656
	16-1032-01	Suction manifold, 1356
19	A37312-021	Distributor and tubes, 1356
	A37312-022	Distributor and tubes, 1656

Replacement compressors include a crankcase heater that may be disconnected or used and a dryer.

CME1356 and CME1656 Service Parts

Water Cooled Refrigeration

Зип Общепит
vsezip.ru
+7(812)987-08-81

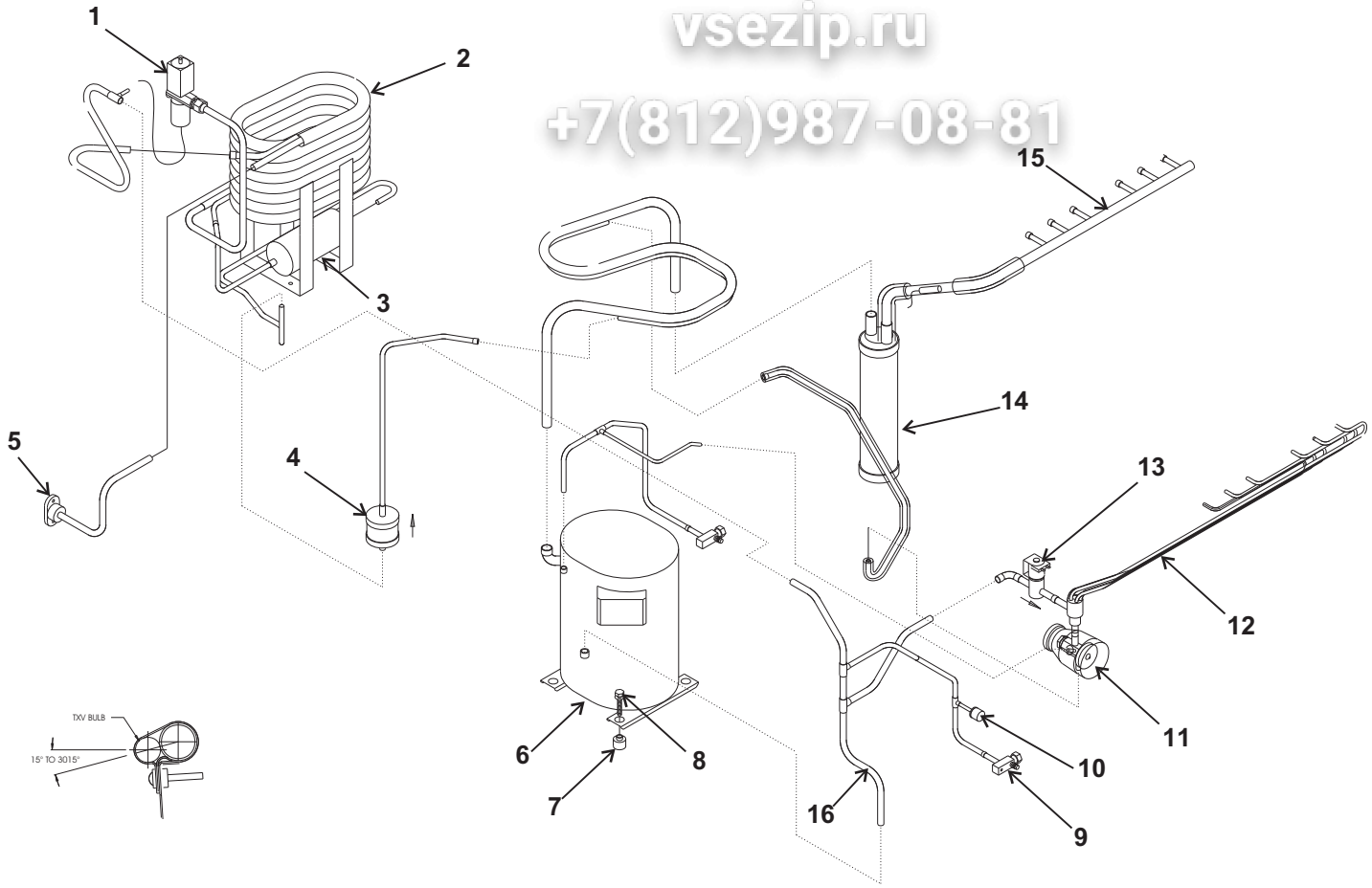

Item Number	Part Number	Description
1	11-0478-21	Water regulating valve
2	18-8767-25	A - E series water cooled condenser
	18-8865-21	F & higher series water cooled condenser
3	02-2628-02	Receiver
4	02-3319-02	Filter dryer
5	A31828-003	Adapter
6	Compressors:	
	18-8751-23	60 Hz, single phase
	18-8751-25	60 Hz, 3 phase
	18-8751-27	50 Hz, single phase
7	18-2300-27	Grommet
	18-2200-27	Sleeve
8	03-1405-20	Bolt
	03-1407-07	Washer
9	16-0832-20	Access valve
	16-0832-03	Port cap
	16-0832-02	Stem cap
10	11-0501-21	Hi pressure cut out
11	16-1066-21	TXV, ANE1 ¼ SZ
	02-3396-01	Insulation for TXV
12	A37312-021	Distributor and tubes, 1356
	A37312-022	Distributor and tubes, 1656
13	11-0507-01	Hot gas valve, 1356
	11-0507-22	Hot gas valve, 1656
	16-1063-01	Strainer for hot gas valve
	12-2719-23	Coil for hot gas valve
14	16-1031-21	Accumulator
15	16-1032-02	Suction manifold, 1656
	16-1032-01	Suction manifold, 1356
16	11-0515-21	Temp sensor set

Replacement compressors include a crankcase heater that may be disconnected and a dryer.

CME1356 and CME1656 Service Parts

ЗИП Общепит
vsezip.ru
+7(812)987-08-81

Electrical

Single Phase

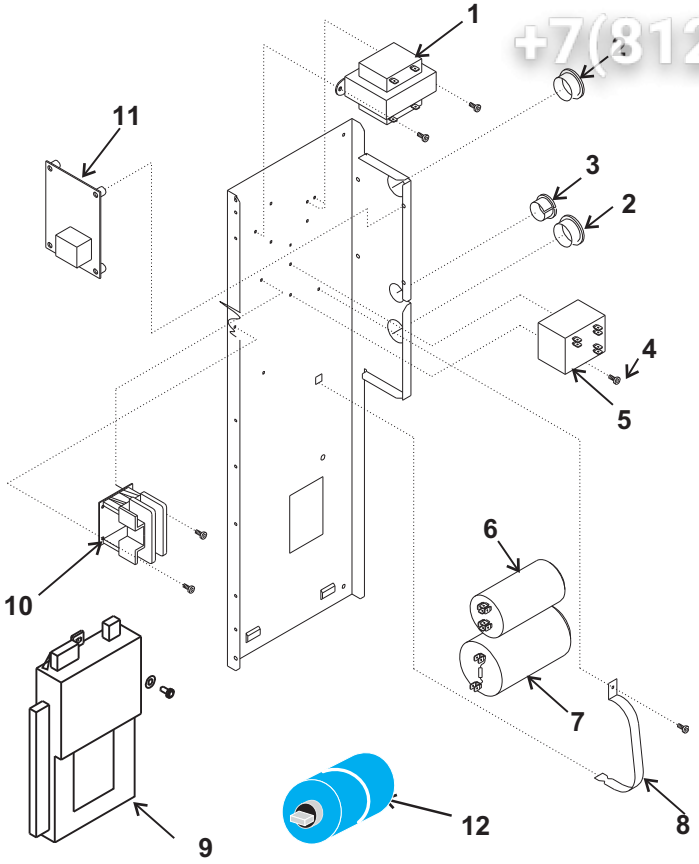

Three Phase

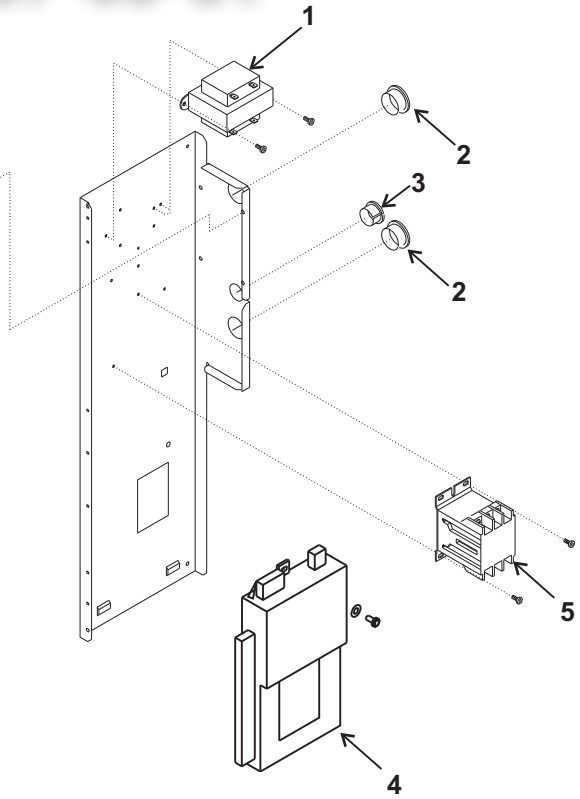

Single Phase

Item Number	Part Number	Description
1	A37217-001	Transformer
2	12-1213-11	Snap bushing
3	12-1213-10	Snap bushing
4	03-1531-01	Screw
5	18-1903-46	60 Hz potential relay
	18-1903-56	50 Hz potential relay
6	18-1902-56	Run capacitor
7	18-1901-27	60 Hz start capacitor
	18-1901-57	50 Hz start capacitor
8	A37125-001	Strap
9	12-2838-23	Controller Kit
10	12-2469-01	Single phase contactor
11	11-0531-22	Purge valve timer
12	18-8840-01	PTCR
12a	18-8840-02	PTCR Bracket

Three Phase

Item Number	Part Number	Description
1	A37217-001	Transformer
2	12-1213-11	Snap bushing
3	12-1213-10	Snap bushing
4	12-2838-23	Controller
5	12-2533-01	Three phase contactor
6	11-0531-22	Purge valve timer

Not Shown	11-0521-21	Bin thermostat
	02-3740-01	Thermostat bracket
	03-1675-03	3 pronged knob
	12-2701-01	Bin thermo harness
	12-2663-01	Lo voltage harness, A-C
	12-2659-01	Hi voltage harness, A-C
	12-2679-01	Relay, -6 B thru H
	12-2686-01	Fuse, -6 B thru H
	12-2639-02	Transformer, -6 B, thru H
	12-2798-01	Hi volt harness, -6 B thru H
	12-2738-01	Lo volt harness, -6 B thru C
	12-2792-01	Lo volt harness, -6 D thru H
	D thru H series:	
	12-2791-01	Lo voltage harness, 60 Hz
	12-2796-01	Hi voltage harness, 60 Hz

CME1356 and CME1656 Service Parts

BH900 Ice Storage Bin

Зип Общепит
vsezip.ru
+7(812)987-08-81

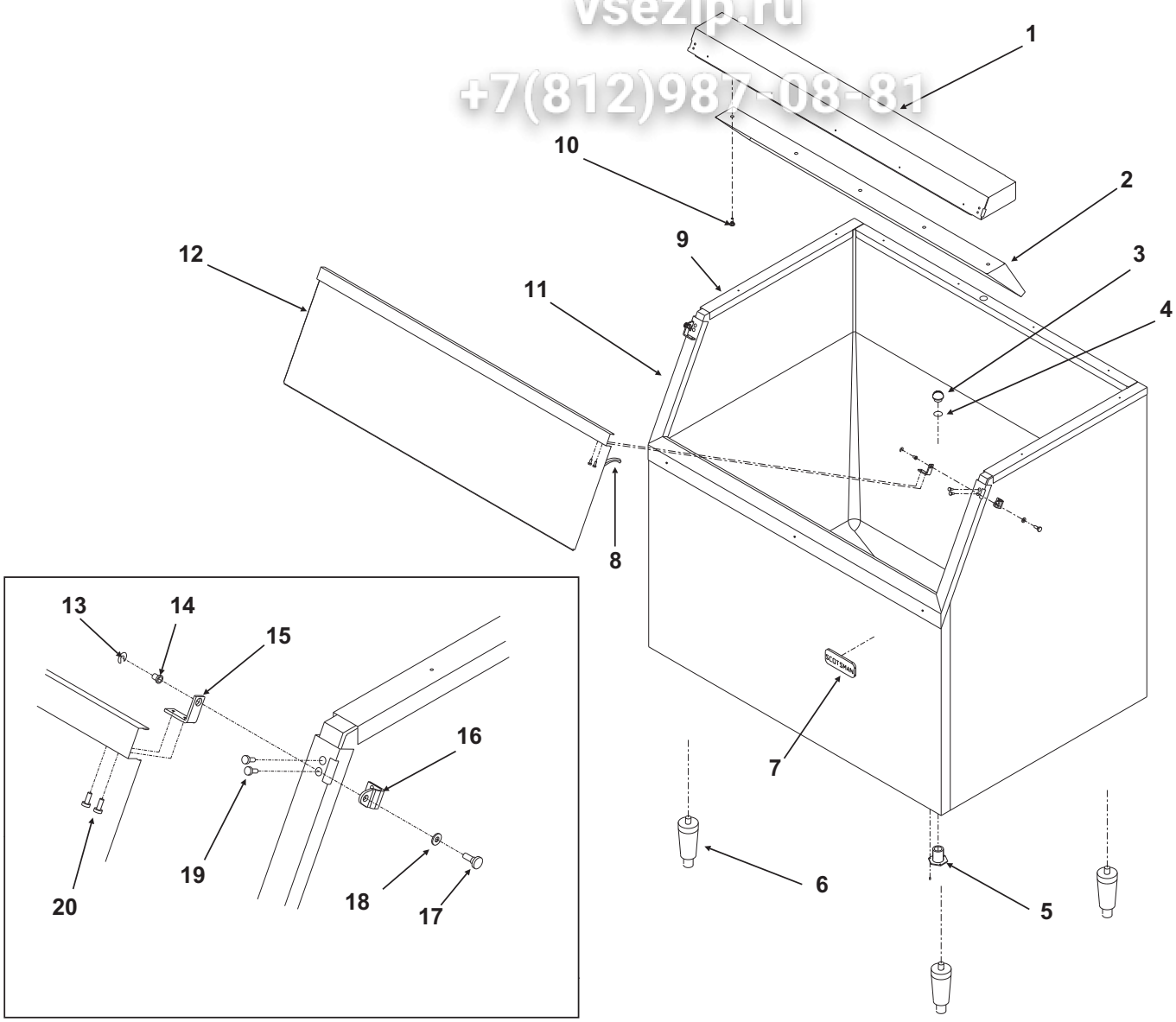

ITEM NUMBER	PARTS NUMBER	DESCRIPTION
1	A35322-020	Canopy Assembly
2	A35152-001	Ice Baffle
3	02-2809-01	Drain Top
4	13-0617-11	O-ring
5	02-3201-01	Drain casting
6	KLP2E	Leg Kit, Black
7	15-0808-01	Emblem
8	13-0595-00	Door gasket(order qty 7)
9	19-0503-04	Bin gasket (order by foot)
10	03-0727-11	Baffle screw
11	A35275-001	Door frame assy. except C
	A37641-021	C series door frame
12	A35323-020	Door with gasket - BH900
13	03-1539-09	“E” ring
14	02-2380-01	Hinge bushing
15	02-3195-01	Door hinge
16	02-3196-01	Bin hinge
17	02-2806-01	Shoulder screw
18	02-2380-02	Spacer
19	03-1403-29	Screw 10-24
20	03-1403-24	Screw 10-24

CME1356 and CME1656 Service Parts

BH1356 Ice Storage Bin

Зип Общепит
vsezip.ru
+7(812)987-08-81

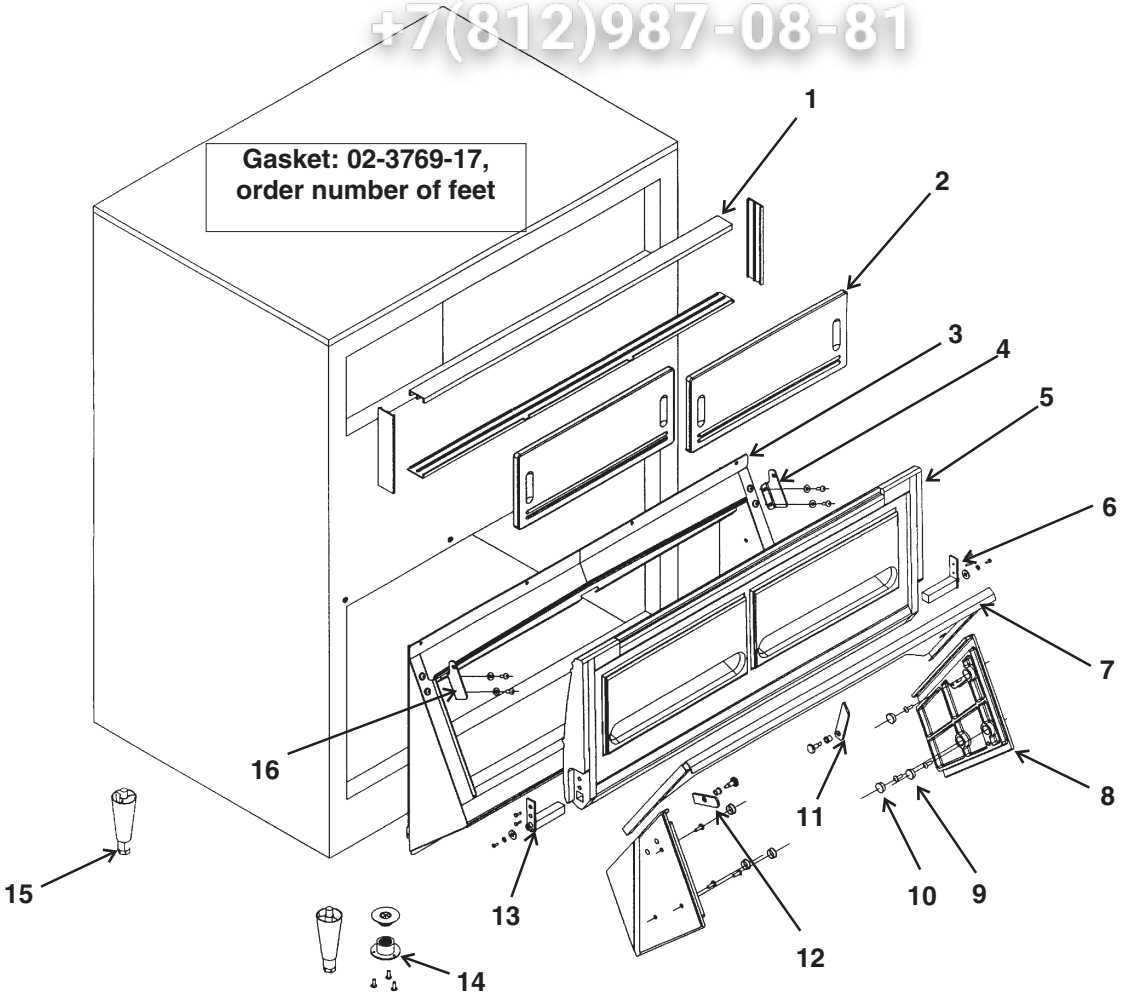

Item Number	Part Number	Description			
			10	02-3769-14	Plugs for end plate
1	02-3769-02	Track	11	02-3769-10	Catch for ice gate
2	02-3769-16	Window	12	02-3769-15	Ice gate retainer
3	02-3769-04	Lower frame assembly	13	02-3769-06	Left hinge
4	02-3769-08	Left and right hinges	14	02-3769-01	Plastic drain
5	02-3769-05	Door with door hinges	15	KLP2S	Legs
6	02-3769-07	Right hinge			
7	02-3769-09	Ice gate			
8	02-3769-12	End plate guide (pair)			
9	02-3769-13	Screws for end plate			

CME1356 and CME1656 Service Parts

Зип Общемп
vsezip.ru
+7(812)987-08-81

Kit Parts

Stacking Kit - KSCME6-LG

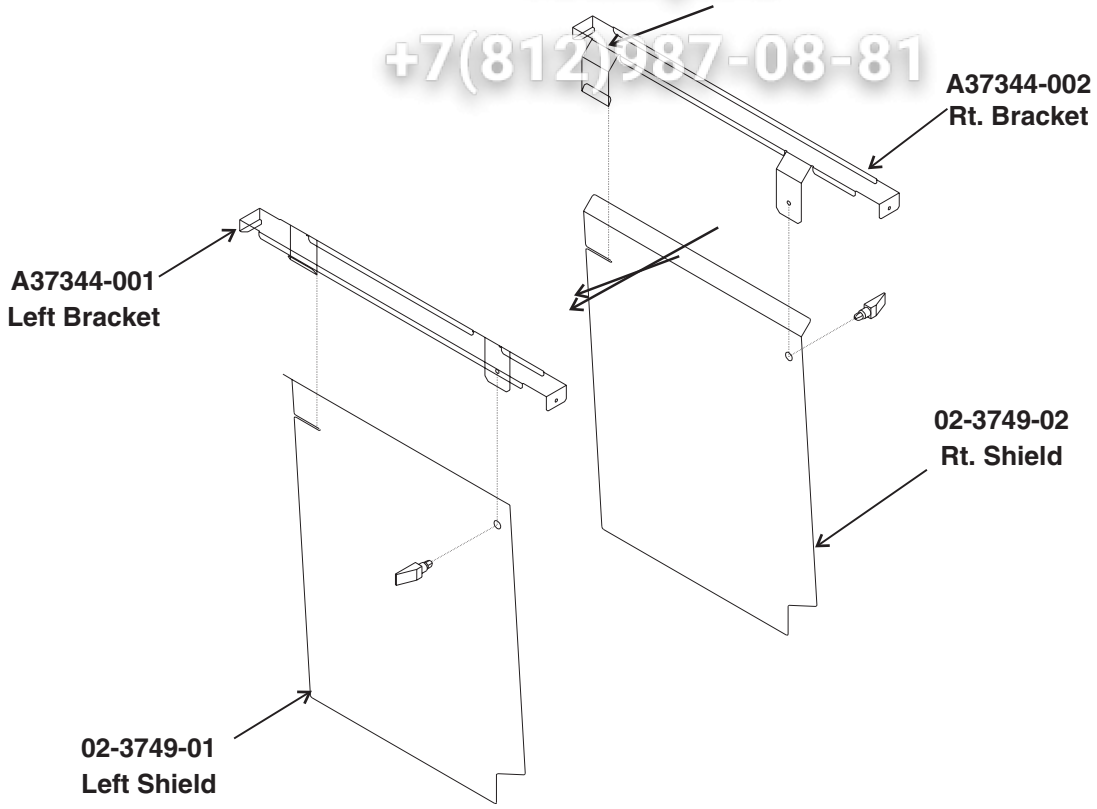

Stacking Kit KSCME6-LG-B

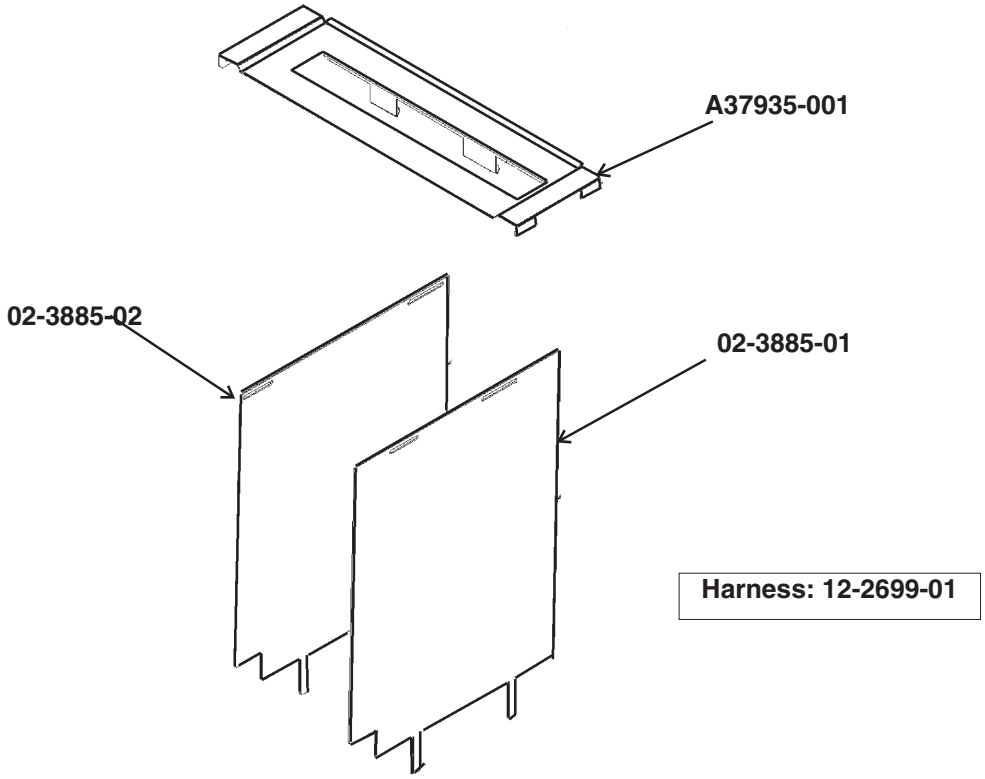

CME1356 and CME1656 Service Parts

Single Phase 60 Hz Wiring Diagram, D - H Series

Зип Общепит
vsezip.ru
+7(812)987-08-81

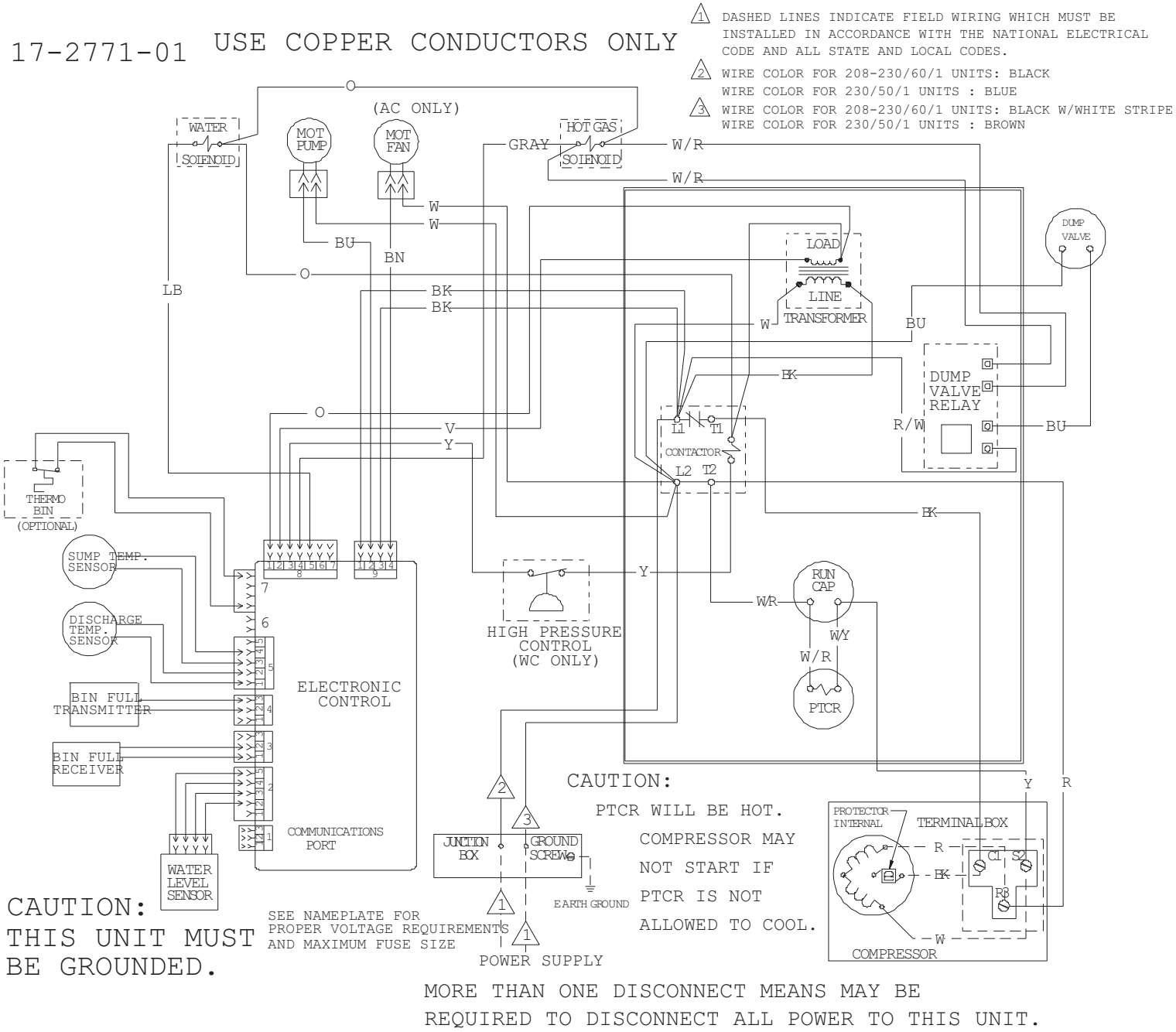

CME1356 and CME1656 Service Parts

Single Phase Schematic Diagram, D - H Series

Зип Общепит
vsezip.ru
+7(812)987-08-81

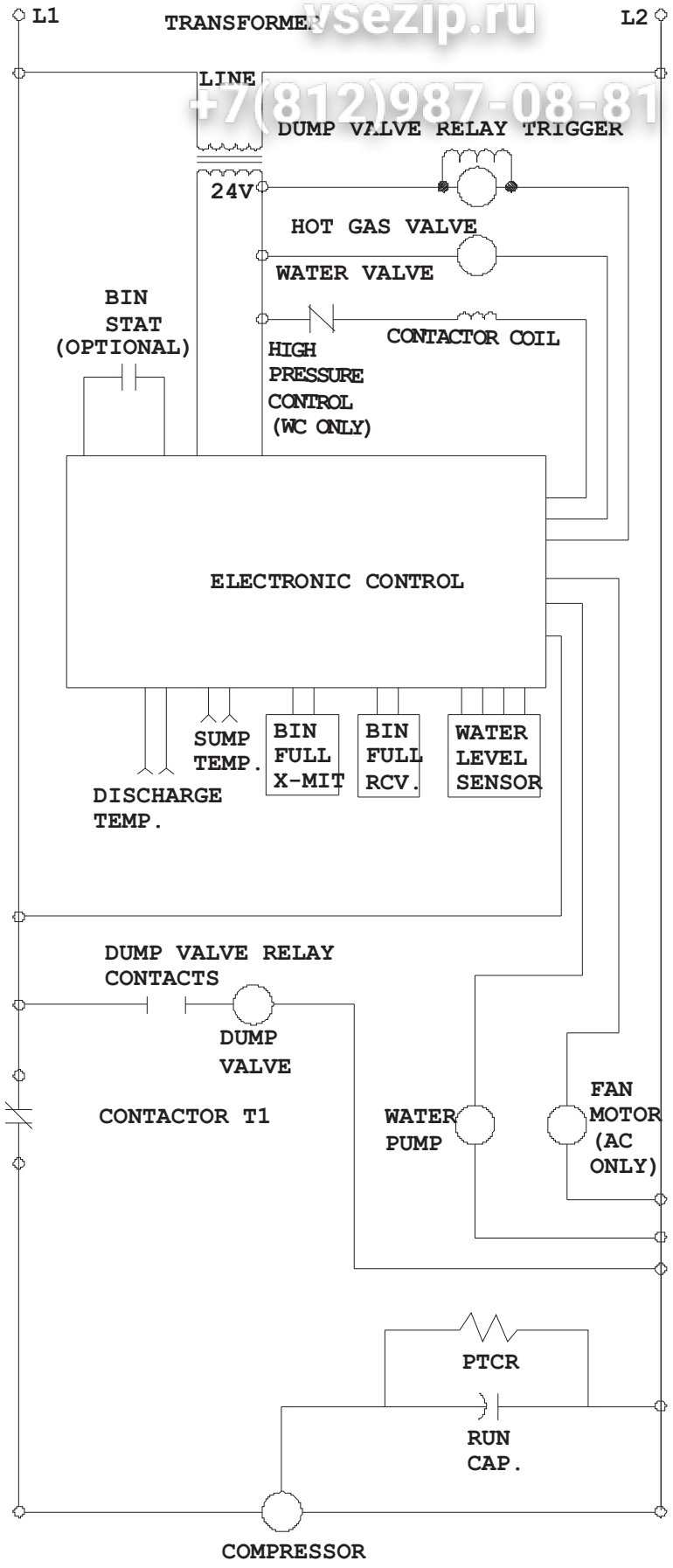

CME1356 and CME1656 Service Parts

Single Phase 60 Hz Wiring Diagram, D - H Series

Зип Общение
vsezip.ru
+7(812)987-08-81

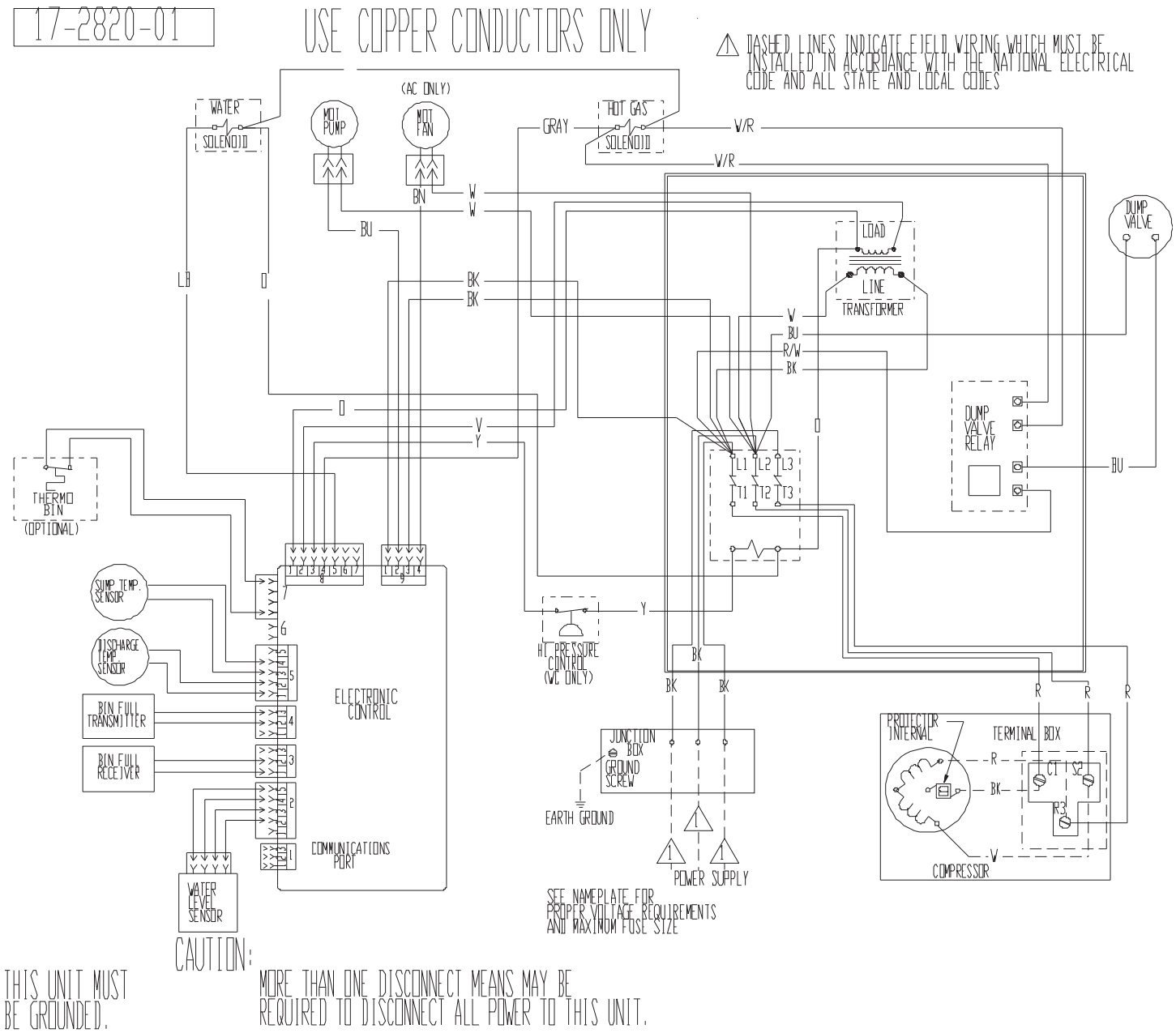

CAUTION:

THIS UNIT MUST BE GROUNDED.

MORE THAN ONE DISCONNECT MEANS MAY BE REQUIRED TO DISCONNECT ALL POWER TO THIS UNIT.

CME1356 and CME1656 Service Parts

Single Phase Schematic Diagram, D - H Series

Зип Общепит
vsezip.ru
+7 (812) 987-08-81

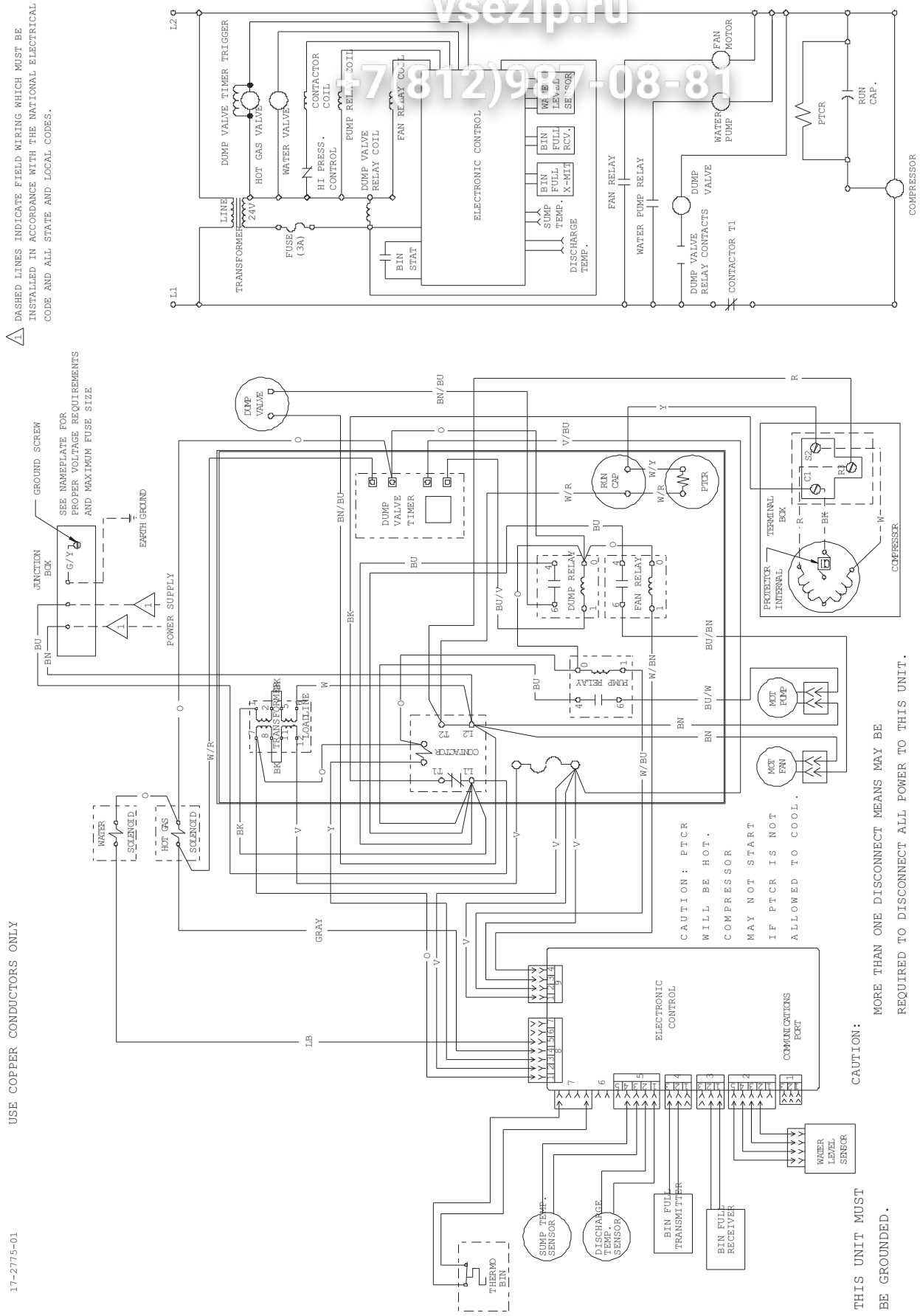

CME1356 and CME1656 Service Parts

Three Phase Wiring Diagram, D - H Series

vsezip.ru
+7(812)987-08-81

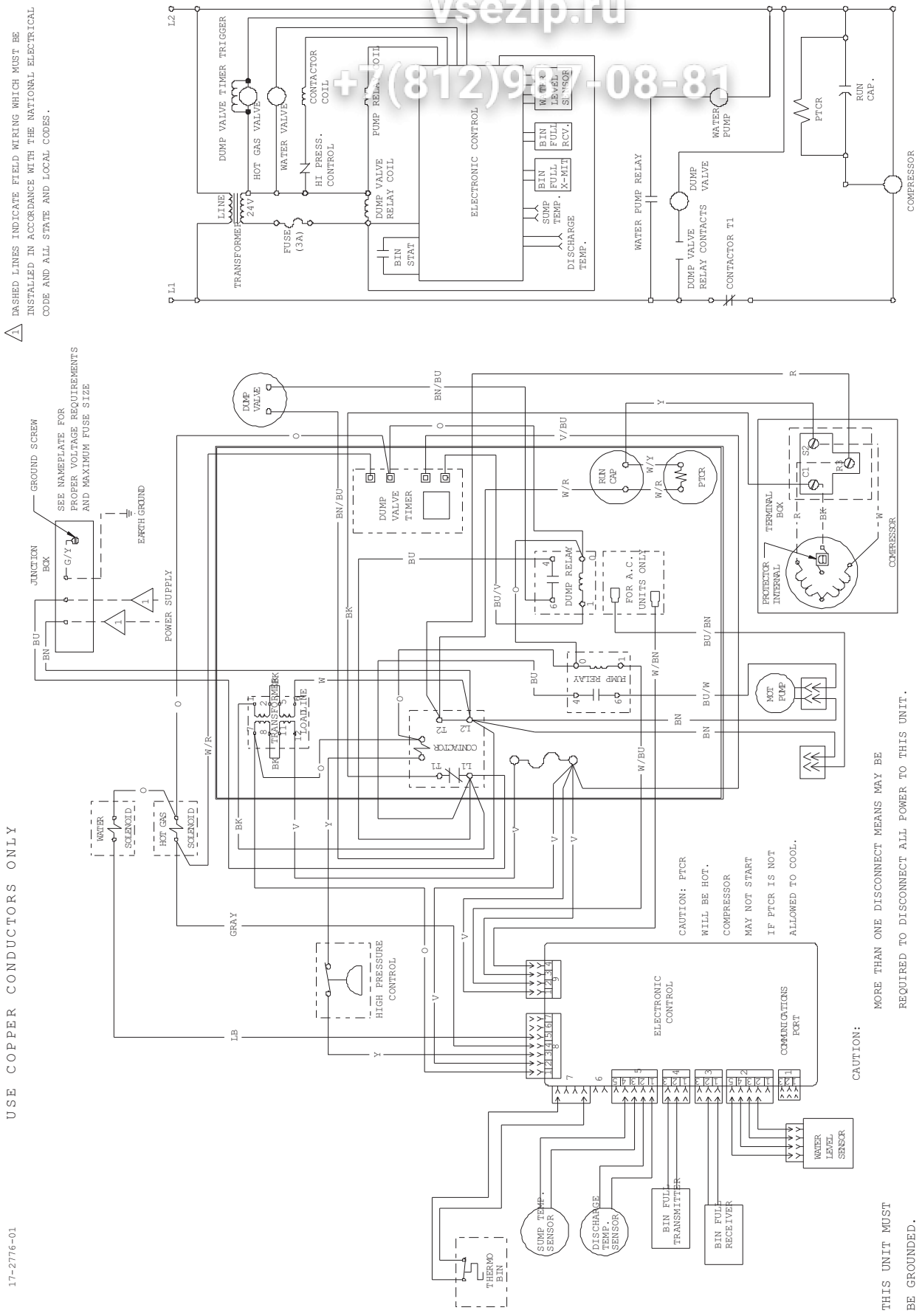

CME1356 and CME1656 Service Parts

Зип Общепит
vsezip.ru
+7(812)987-08-81

Single Phase 50 Hz Air Cooled Wiring Diagram, D - H Series

17-2502-01

USE COPPER CONDUCTORS ONLY

1 DASHED LINES INDICATE FIELD WIRING WHICH MUST BE INSTALLED IN ACCORDANCE WITH THE NATIONAL ELECTRICAL CODE AND ALL STATE AND LOCAL CODES.

2 WIRE COLOR FOR 208-230/60/1 UNITS: BLACK
WIRE COLOR FOR 230/50/1 UNITS : BROWN

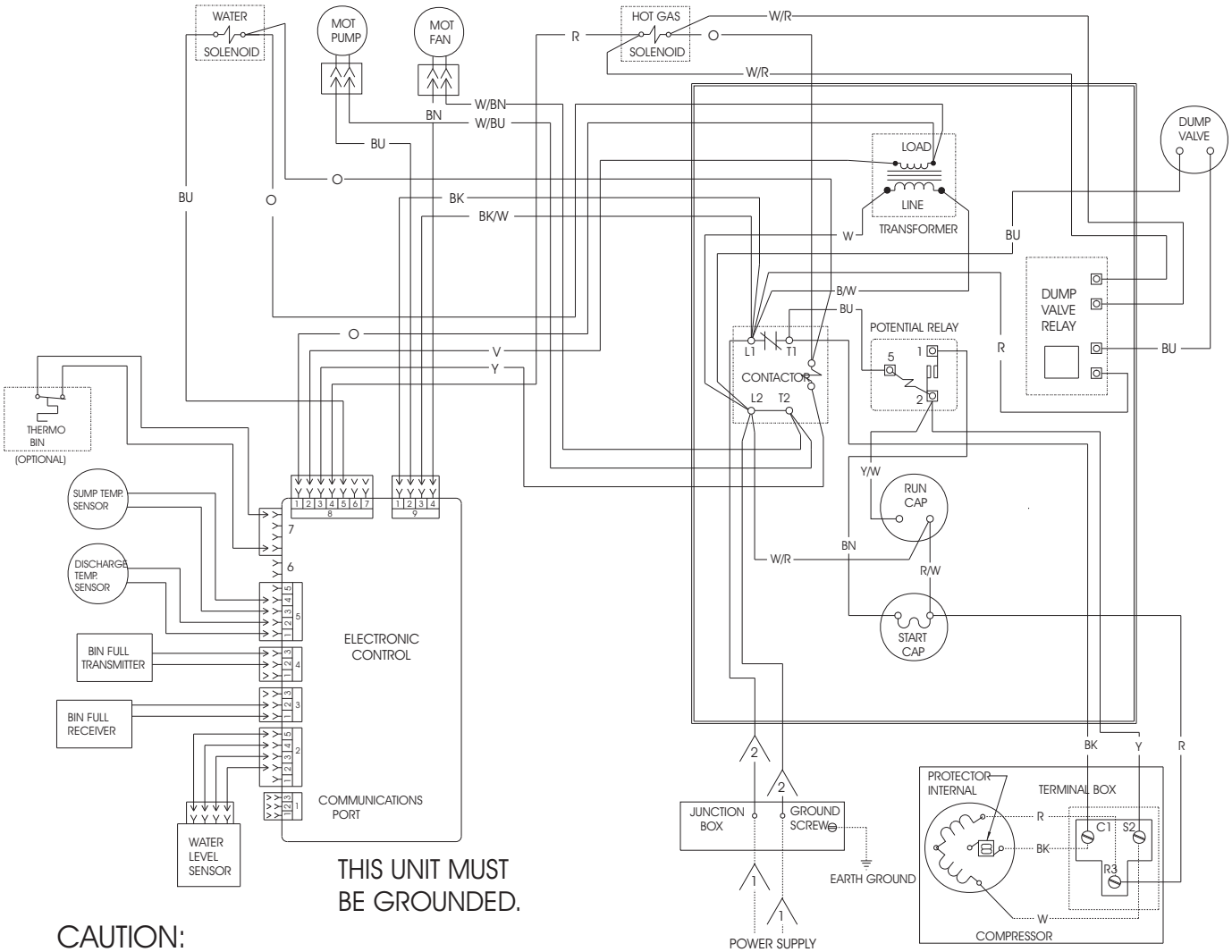

THIS UNIT MUST BE GROUNDED.

CAUTION:
MORE THAN ONE DISCONNECT MEANS MAY BE REQUIRED TO DISCONNECT ALL POWER TO THIS UNIT.

CME1356 and CME1656 Service Parts

Зип Общепит
vsezip.ru
+7(812)987-08-81

Single Phase, 50 Hz Water Cooled Wiring Diagram, D - H Series

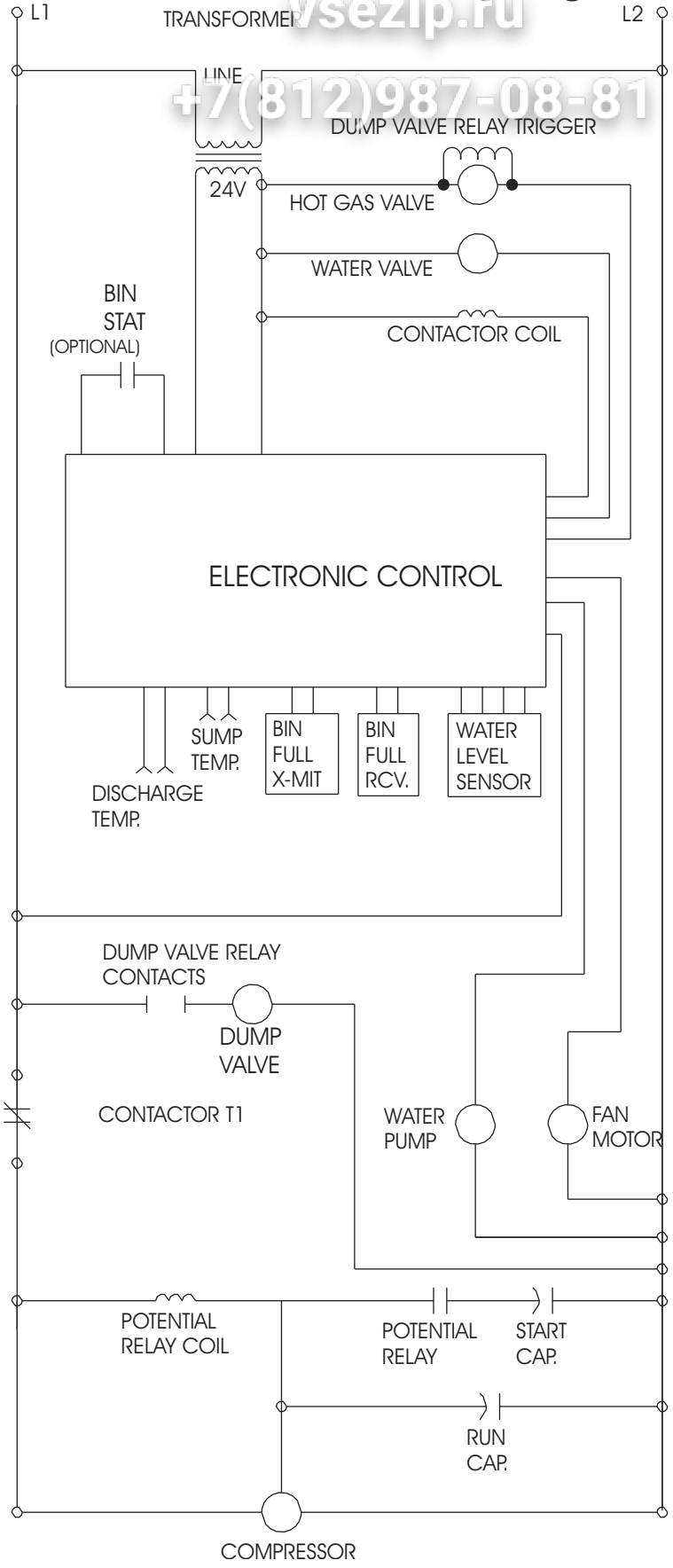

CME1356 and CME1656 Service Parts

Air Cooled Three Phase Wiring Diagram, A - C

Зип Общепит
vsezip.ru
+7(812)987-08-81

17-2511-03

USE COPPER CONDUCTORS ONLY

⚠ DASHED LINES INDICATE FIELD WIRING WHICH MUST BE INSTALLED IN ACCORDANCE WITH THE NATIONAL ELECTRICAL CODE AND ALL STATE AND LOCAL CODES.

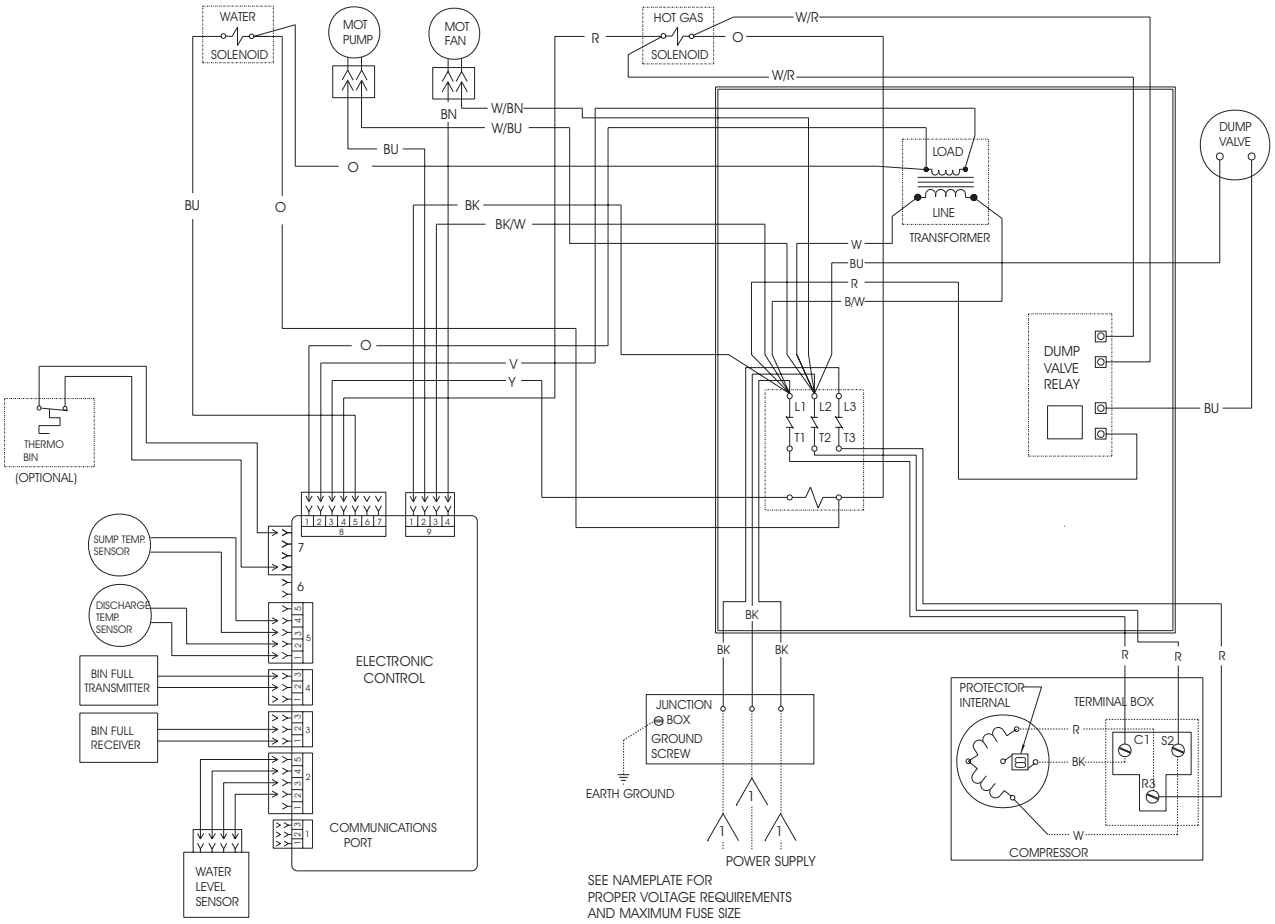

CAUTION:

THIS UNIT MUST BE GROUNDED.

MORE THAN ONE DISCONNECT MEANS MAY BE REQUIRED TO DISCONNECT ALL POWER TO THIS UNIT.

CME1356 and CME1656 Service Parts

Air Cooled Three Phase Schematic Diagram

Зип Общепит
vsezip.ru
+7(812)987-08-81

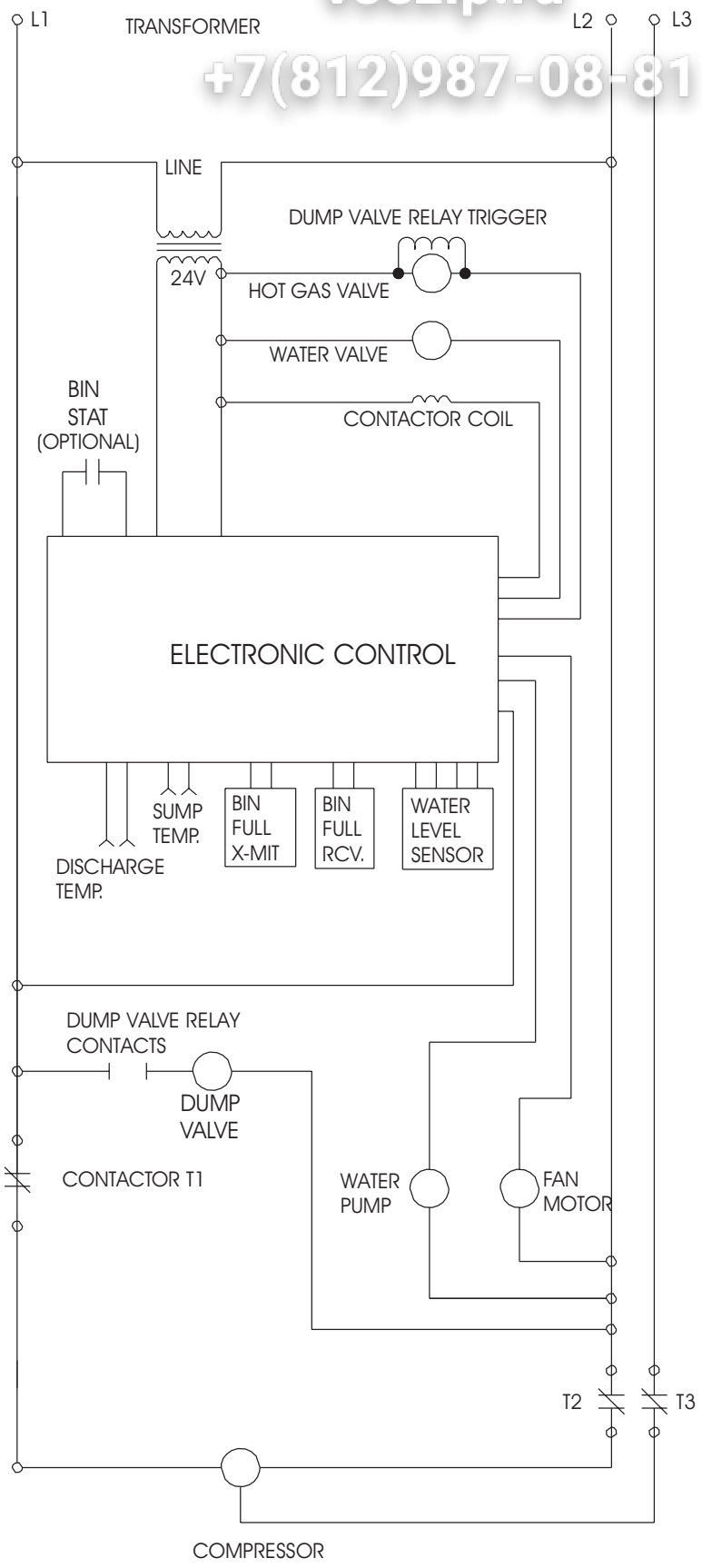

CME1356 and CME1656 Service Parts

Water Cooled Single Phase Wiring Diagram, A - C

Зип Общепит
vsezip.ru
+7(812)987-08-81

17-2503-01 USE COPPER CONDUCTORS ONLY

△1 DASHED LINES INDICATE FIELD WIRING WHICH MUST BE INSTALLED IN ACCORDANCE WITH THE NATIONAL ELECTRICAL CODE AND ALL STATE AND LOCAL CODES.

△2 WIRE COLOR FOR 208-230/60/1 UNITS: BLACK
WIRE COLOR FOR 230/50/1 UNITS : BROWN

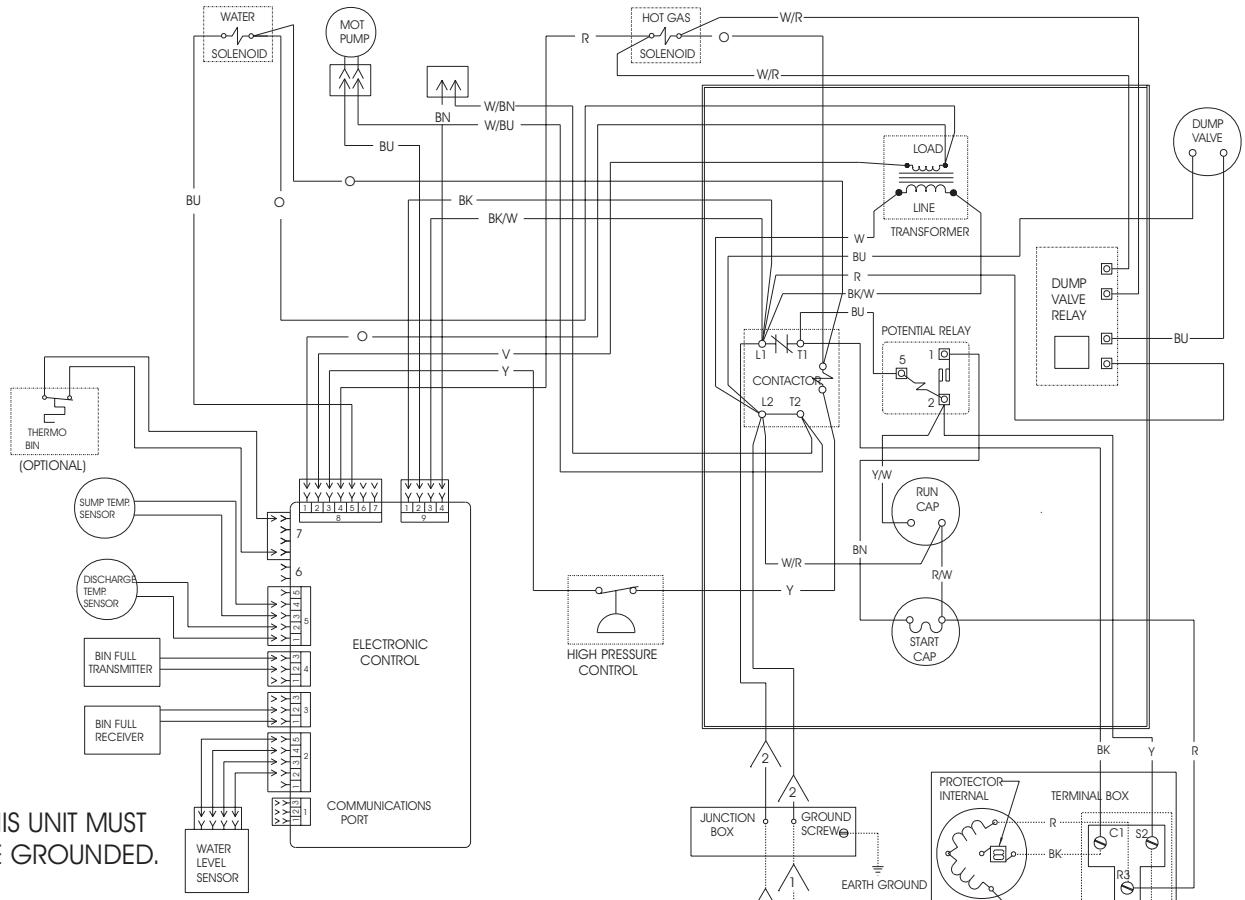

THIS UNIT MUST BE GROUNDED.

CAUTION:
MORE THAN ONE DISCONNECT MEANS MAY BE REQUIRED TO DISCONNECT ALL POWER TO THIS UNIT.

SEE NAMEPLATE FOR PROPER VOLTAGE REQUIREMENTS AND MAXIMUM FUSE SIZE

CME1356 and CME1656 Service Parts

Water Cooled Single Phase Schematic Diagram, A - C

Зип Общепит
vsezip.ru
+7(812)987-08-81

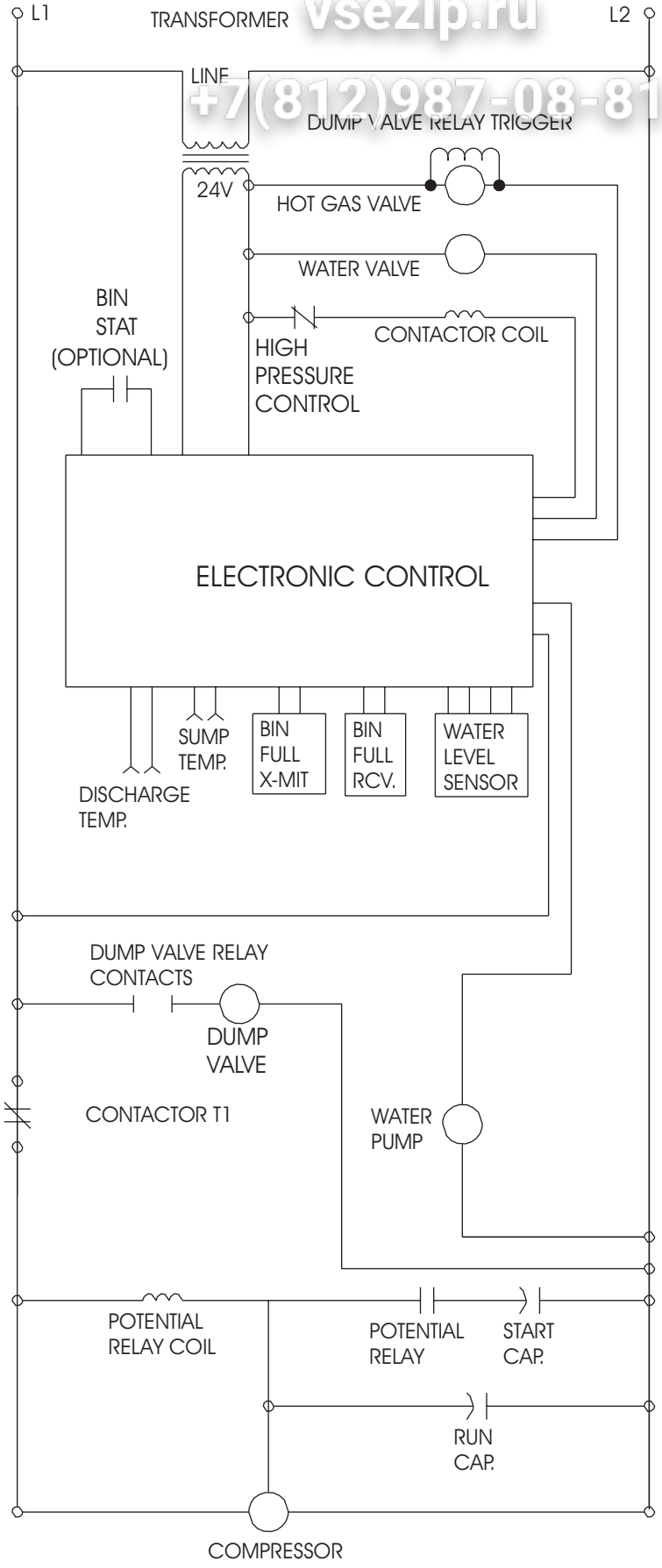

CME1356 and CME1656 Service Parts

Water Cooled Three Phase Wiring Diagram

Зип Общепит
vsezip.ru
+7(812)987-08-81

17-2512-03

USE COPPER CONDUCTORS ONLY

⚠ DASHED LINES INDICATE FIELD WIRING WHICH MUST BE INSTALLED IN ACCORDANCE WITH THE NATIONAL ELECTRICAL CODE AND ALL STATE AND LOCAL CODES.

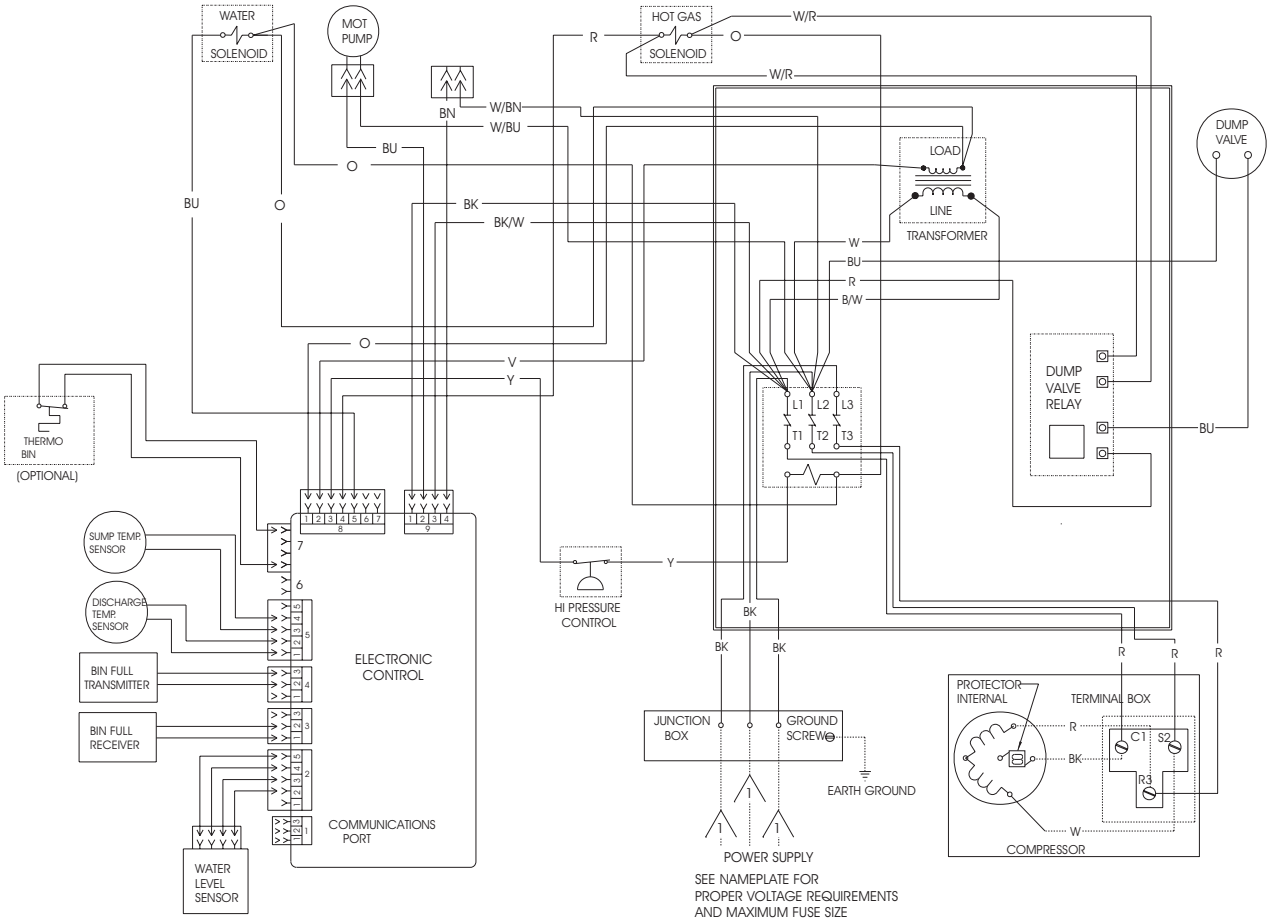

CAUTION:

THIS UNIT MUST BE GROUNDED.

MORE THAN ONE DISCONNECT MEANS MAY BE REQUIRED TO DISCONNECT ALL POWER TO THIS UNIT.

CME1356 and CME1656 Service Parts

Water Cooled Three Phase Schematic Diagram

Зип Общепит
vsezip.ru
+7(812)987-08-81

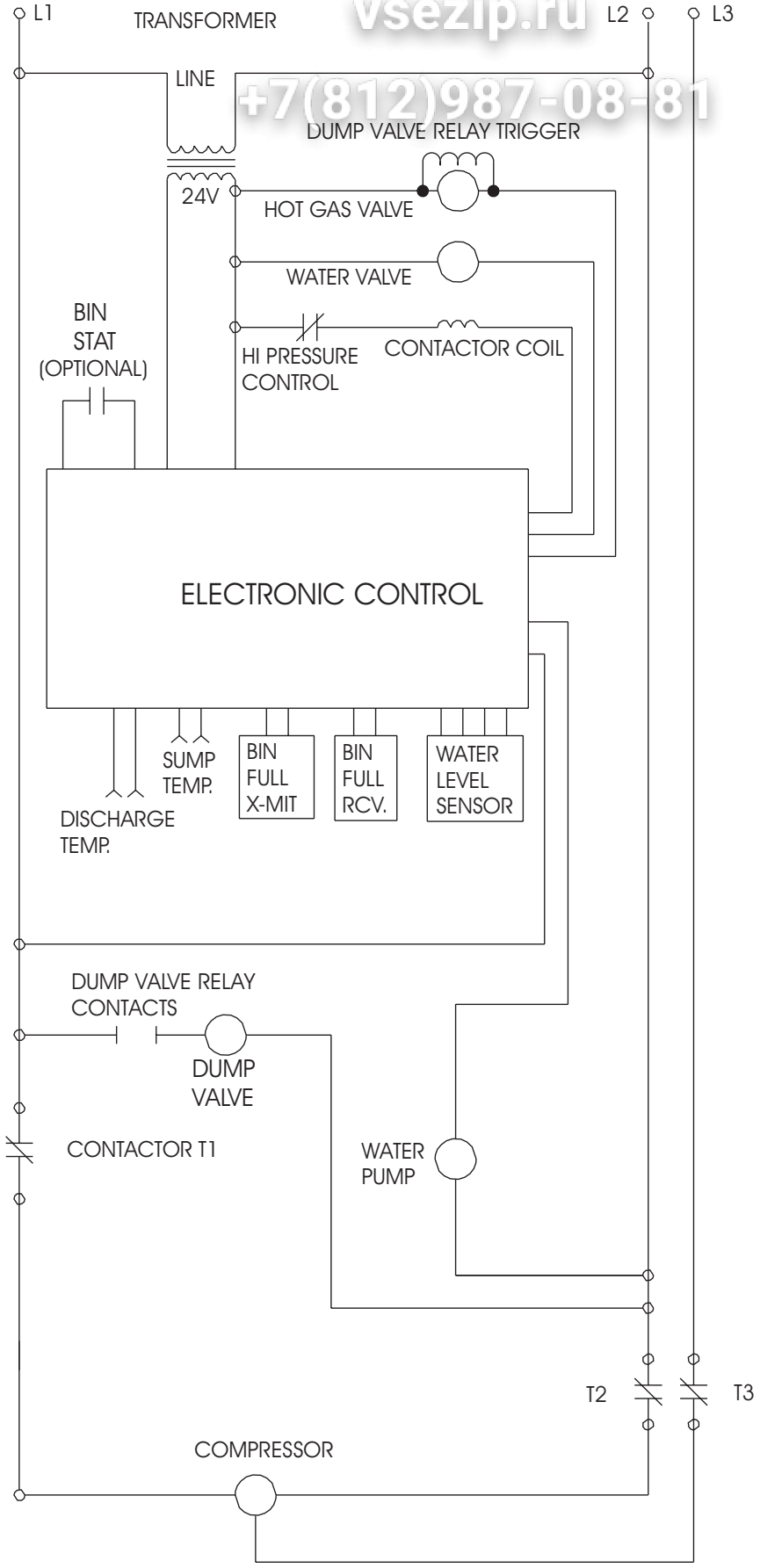

Зип Общепит
vsezip.ru
+7(812)987-08-81

Scotsman®

Bulletin Number: PS - 4 - 2004
Bulletin Date: April 2004

SERVICE BULLETIN

Subject: Controller Cover

Affects all versions of models: CME1356, CME1656, CME1856 and CME2006

The above models are now manufactured with a sheet metal cover over the top of the controller.

Service controllers also are now shipped with a cover that should be applied to these models whenever replacing the controller if the machine does not already have a cover installed.

Whenever cleaning or servicing any unit, check to see whether it has a cover over the controller like the one shown below. If it does not, Scotsman recommends installing a cover. A separate part is now available for this purpose. Its part number is **A37480-021**. It mounts over the top end of the controller and is secured by two sheet metal screws. Use the cover as a template and drill two 1/8" holes for the two screws.

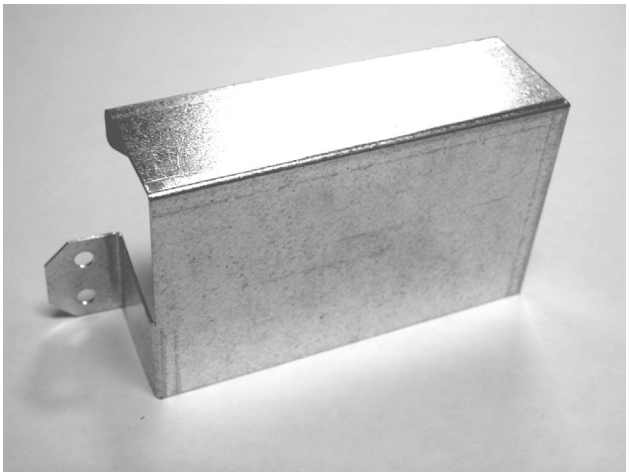

Controller Cover

Cover Installed on Unit

Scotsman is shipping a supply of covers to all Scotsman Distributors and listed service agencies. A supply of covers should be carried by each service person on service calls so a cover may be installed on the unit being cleaned or serviced if one is not already in place. Additional covers may be obtained free of charge from Scotsman, through the local Scotsman Distributor, as needed.