MOD:XB895

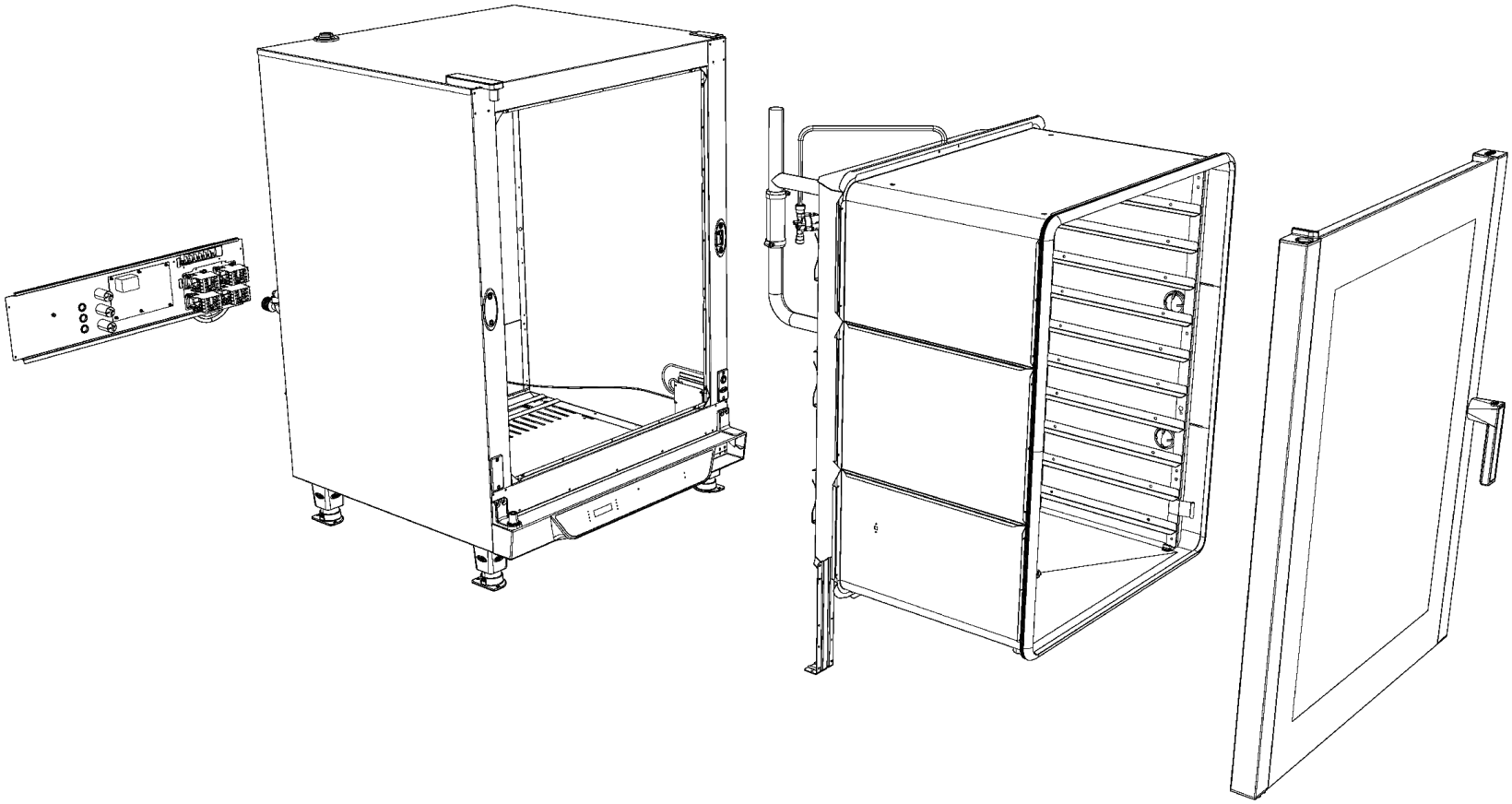

MOD:XB895

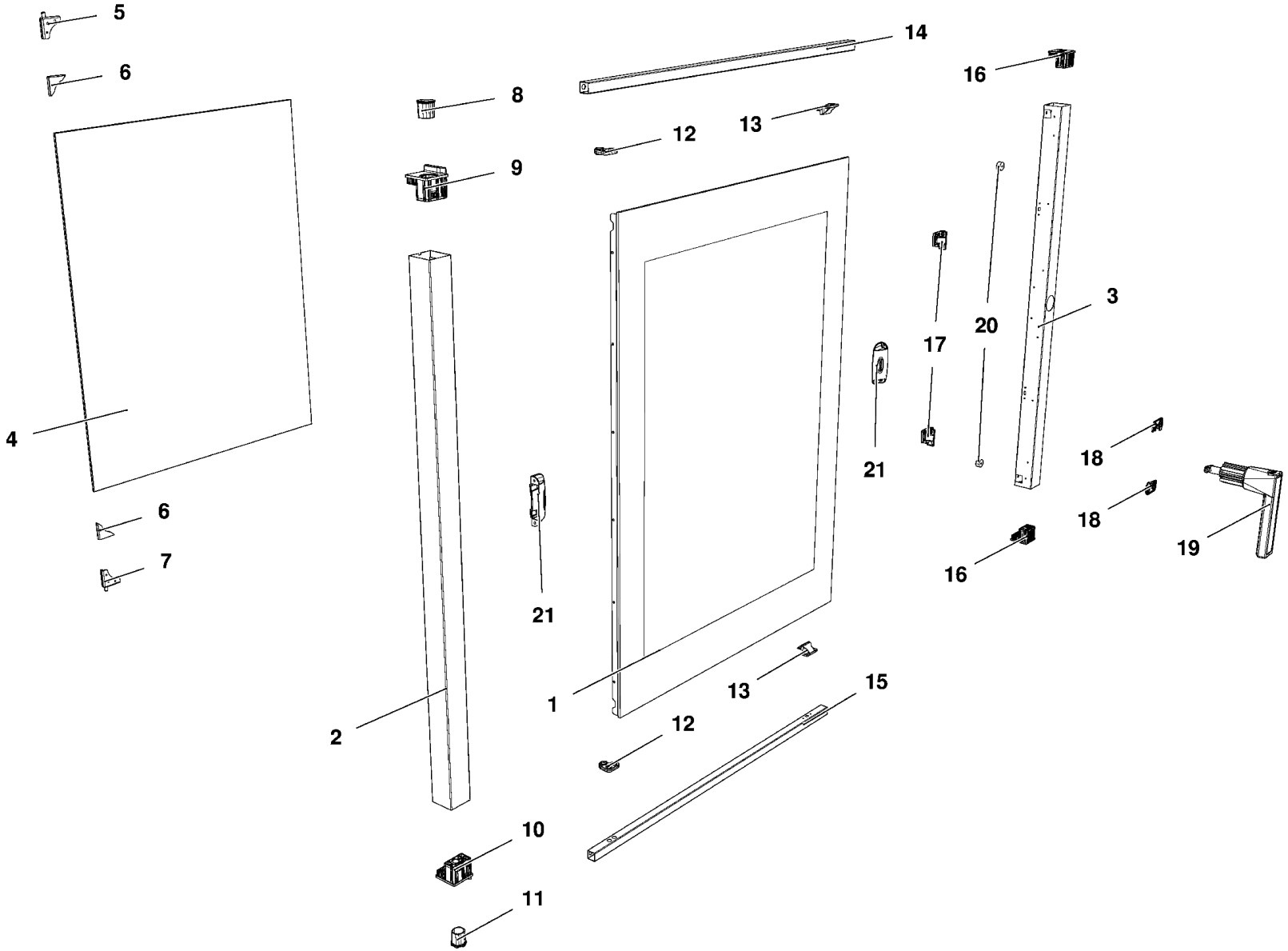

MOD:XB895

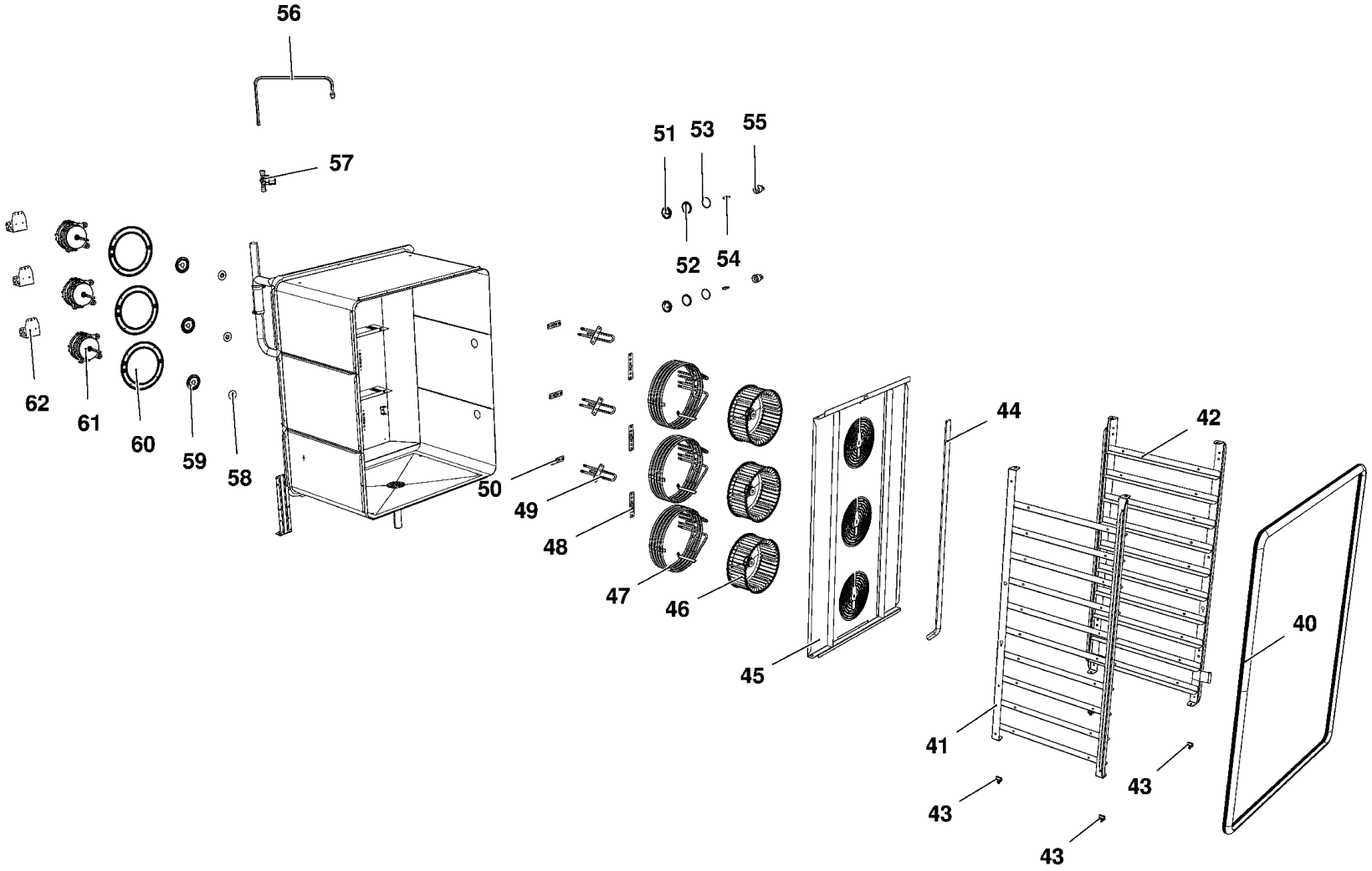
56
57
51
53
55
52
54
62
61
60
59
58
50
49
48
47
46
45
44
42
41
43
43
43
40

MOD:XB895

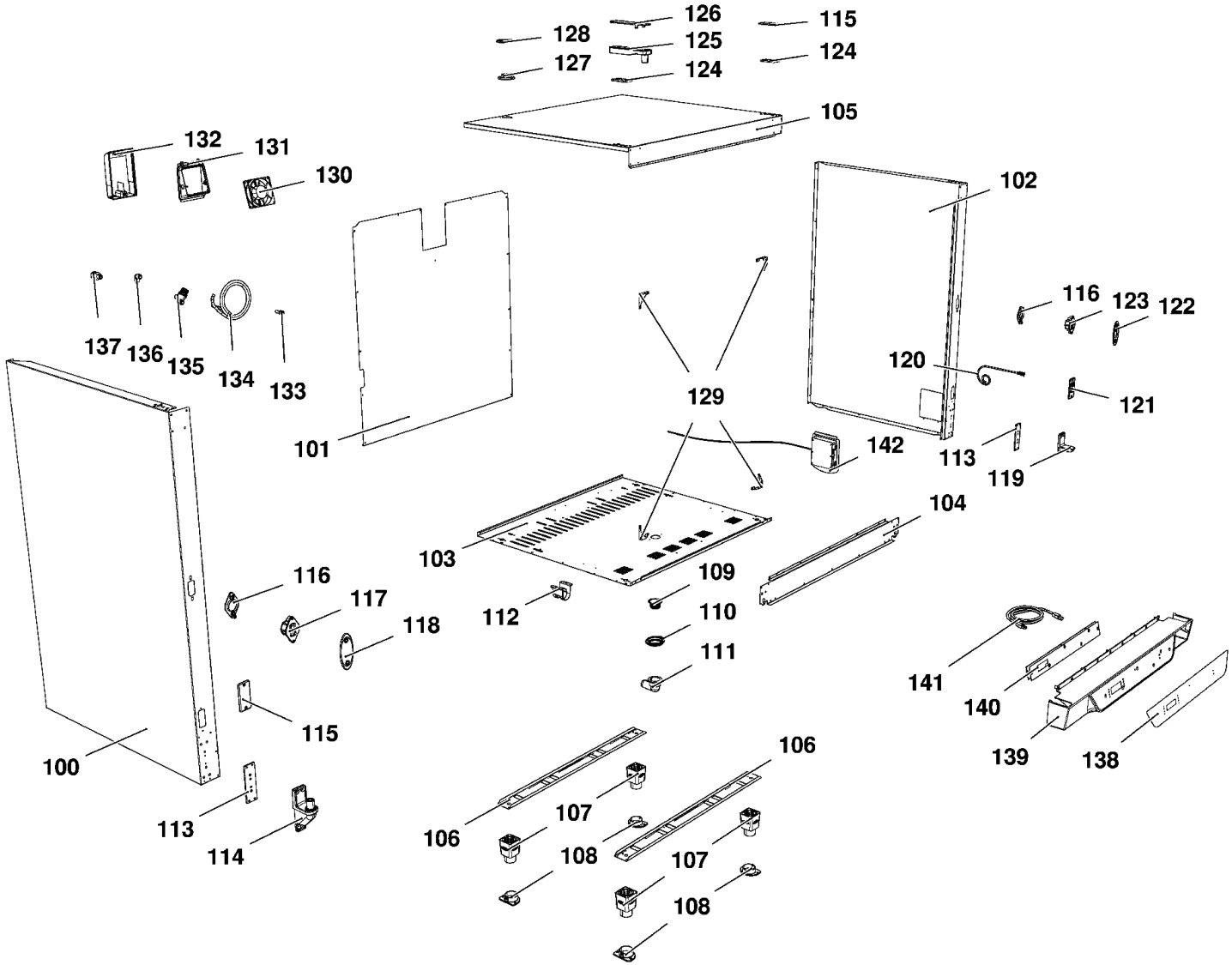
128
127
126
125
124
115
124
105
132
131
130
102
137
136
135
134
133
101
129
116
123
122
120
121
142
113
119
104
103
116
117
118
112
109
110
111
115
100
113
114
106
107
108
106
107
108
141
140
139
138

MOD:XB895

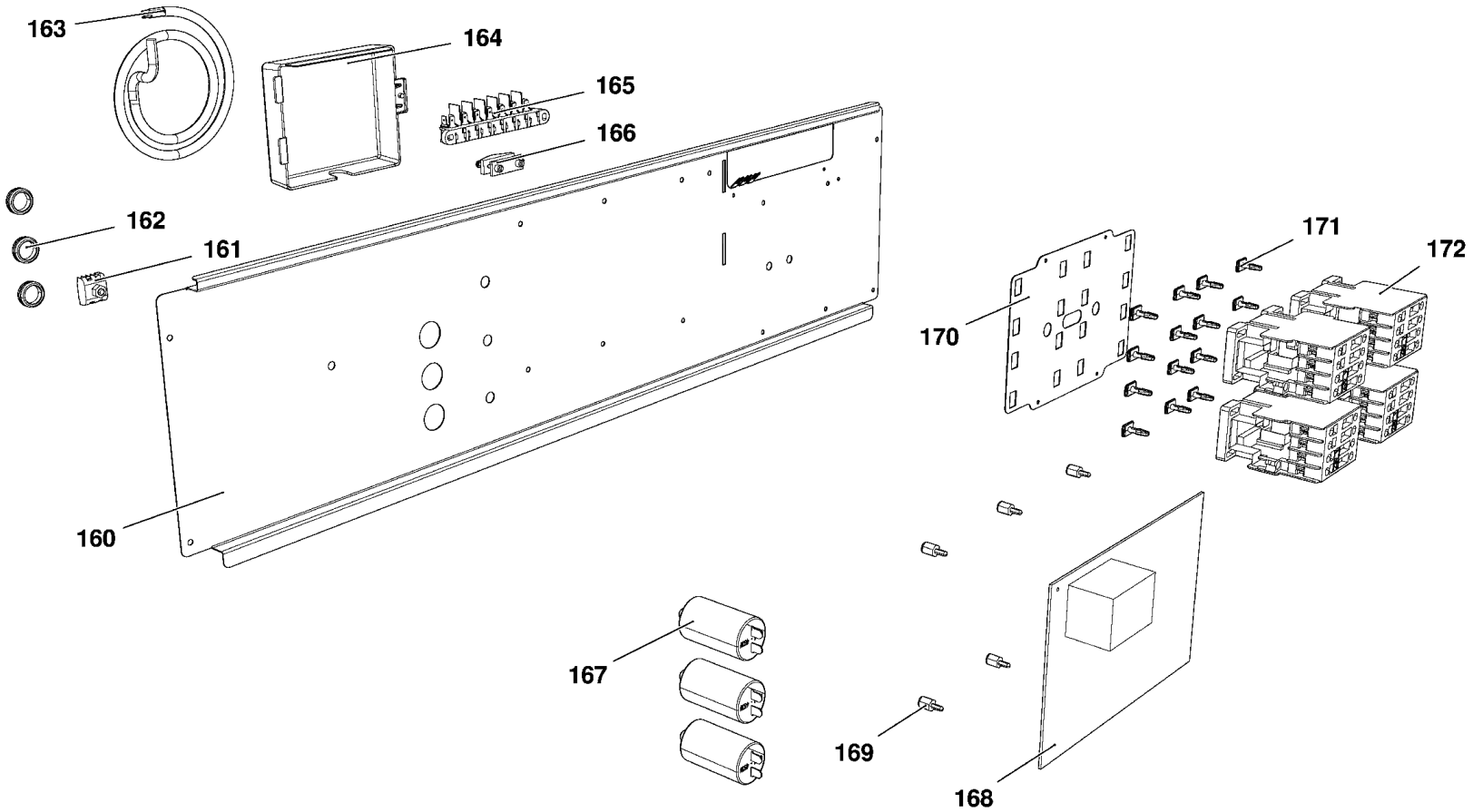

MOD:XB895

IT

Descrizione codici

1	VT1254A	VETRO ESTERNO XB89- XC89-
2	TB2386A	COLONNINA SX BL CL 89 50x50x1.2
3	TB2385A	COLONNINA DX BL CL 89 50x50x1.2
4	VT1140A	VETRO INTERNO 743X940X6 BETFL
5	CR1085A	CERNIERA VETRO INT INOX SUP
6	GN1181A	GUARNIZIONE CERN VETRO INT CR1085-1086
7	CR1086A	CERNIERA VETRO INT INOX INF
8	VM1511A	BOCCOLA LISCIA PERNO PORTA CHEFFTOP
9	VM1977A	TAPPO FULCRO SUPERIORE PORTA CL BL
10	VM1978A	TAPPO FULCRO INFERIORE PORTA CL BL
11	VM1510A	BOCCOLA SCANALATA PERNO PORTA XBC/XVC
12	VM1680A	CERNIERA APERTURA VETRO INTERNO
13	VM2043A	SUPPORTO VETRO SUP - INF
14	TB2384B	LISTELLO SUPERIORE BL CL 20x20x1
15	TB2404A	LISTELLO INFERIORE BL CL 20x20x1
16	VM1976A	TAPPO ESTETICO COLONNINA PORTA CL BL
17	VM2042A	ASSIEME CHIUSURA VETRO INTERNO LAT
18	VM1490A	COPRI VITI MANIGLIA CHEFTOP BAKERTOP
19	VM1180B	IMPUGNATURA MANIGLIA CT BT
20	VE1030A	CALAMITA D=22,9mm PER MICROPORTA
21	VM1591A	STAFFA SPINGIVETRO INTERNO XVC1004
40	GN1343B	GN1006A-GUARINIZIONE PORTA XBC804-805
41	GRL1266A	SUPPORTO LAT. DX 10X600X400
42	GRL1265A	SUPPORTO LAT. SX 10X600X400
43	VM1820A	NOTTOLINO M6 CROMATO FISS. SUPPORTI
44	TB2191A	TUBO INTERNO UMIDITA' XB89- XV89- Ø16x1
45	0G1473A	CARTER PUNTATO XB89- XV89-
46	VN1030A	VENTOLA D196 H81 39 PALE DADO M8
47	RS1150A	RESISTENZA CIRC. D=230 5 SPIRE
48	GN1327A	GUARNIZIONE RES. 100X22
49	RS1261A	RESISTENZA MOTORE BAKERLUX\CHEFLUX
50	GN1326A	GUARNIZIONE RESISTENZA 71x19 G6.25
51	VT1195A	VETRO COPRILAMPADA BOROSILICATO TEMPRATO
52	GN1065A	GUARNIZIONE PORTALAMPADA DE=53.2
53	GN1055A	OR 46x2 VMQ 70 ROSSO
54	VE1005A	LAMPADA HALOPIN 25W
55	VE1015A	PORTA LAMPADA SERIE 2 PER LAMPADA
56	TB1515A	TUBO EST. UMIDITA' + RC1165A0
57	EL1252A	ELETTROVALVOLA H2O 1 VIA RID. VERDE
58	GN1140A	GUARNIZIONE PORTAMOTORE STAMP.
59	0H4305A	DISCO TENUTA ALBERO MOTORE INOX STP
60	0H3586A	LAMIERA PROTEZIONE MOTORE ZINCATO
61	VN1130A	MOTORE FORNO 330W 230V 50/60HZ
62	0H4851A	STAFFA SUPPORTO CABLAGGI STD
100	0D2210A	FIANCO SX BL CL 89-
101	0F1469A	SCHIENA ZINCATA XB89- XV89-
102	0D2225A	FIANCO DX DYNAMIC XB895
103	0E1331B	FONDO ZINCATO BAKERLUX CHEFLUX
104	0H6240A	LAMIERA CRUSCOTTO BAKERLUX CHEFLUX
105	0D2125A	COPERCHIO BAKERLUX CHEFLUX
106	0H6395A	LONGHERONE BT S.5-E
107	PD1066B	PIEDE H100 PLASTICA BICOMPONENTE
108	PD1063A	STAFFA BLOCCAGGIO PIEDE CT BT
109	GN1400A	GUARNIZIONE SIFONE
110	VM2039A	ANELLO FISSAGGIO CURVA DI SCARICO
111	VL1026A	CURVA PER TUBO DI SCARICO
112	VM2035A	SUPPORTO PER TUBO DI SCARICO
113	0H6333A	CONTROSTAFFA PORTA FILETTATA BL CL
114	VM1975A	STAFFA INFERIORE SOSTEGNO PORTA
115	VM1195A	PIASTRINA COPRIFORI XVC204/304/504/704
116	VM1192A	COPERCHIO SCROCCO MANIGLIA CT BT
117	VM1191A	SCROCCO MANIGLIA SX CT BT
118	VM1461A	COPERCHIO SX SCROCCO PORTA XBC/XVC
119	VM1974A	PIASTRINA CHIUSURA CRUSCOTTO
120	VE1020A	MICROINTERRUTTORE PORTA MAGNETICO
121	VM1201A	PIASTRINA SUPPORTO MICROPORTA MAGNETICO
122	VM1460A	COPERCHIO DX SCROCCO PORTA XBC/XVC
123	VM1190A	SCROCCO MANIGLIA DX CT BT
124	0H2560A	CONTROSTAFFA ZINCATA PORTA C.T.
125	VM1165B	STAFFA SUPERIORE PORTA CT BT
126	VM1166A	COPERCHIO STAFFA SUPERIORE PORTA
127	GN1275A	GUARNIZIONE CAMINO SILICONE NERO XVC
128	0H3790A	LAMIERA TENUTA CAMINO
129	0H1450A	ANGOLO FACCIATA MUFFOLA INOX XB-XV-XG
130	VN1120B	VENTOLA RAFFREDDAMENTO 12V CABLATA
131	VM1555A	SUPPORTO VENTOLA RAFFREDDAMENTO CT BT
132	VM1556A	PROTEZIONE VENTOLA RAFFREDAMENTO CT-BT
133	RC1002A	RACCORDO RIDUZIONE CODOLO 10M-8F
134	TB2237A	TUBO Ø10 ALLACCIAMENTO RETE
135	VL1034A	FILTRO ACQUA Ø10 MESH100
136	RC1360A	RACCORDO GOMITO JG 10-10
137	RC1365A	RACCORDO JG FEMMINA 3/4"-10
138	MS1010A	MASCHERINA SERIGRAFATA BAKERLUX/CHEFLUX
139	VM1973A	CRUSCOTTO BAKERLUX DYNAMIC
140	PE1985A	ASM SCHEDE CONTROLLO BAKERLUX
141	CE1305A	CAVO RJ45 - RJ45 L=2MT
142	PE1971A	ASSIEME RIARMO RJ45
160	0H6771A	SUPPORTO COMPONENTI BL DYNAMIC
161	VM1750A	MORSETTIERA A PETTINE
162	VM1505A	PASSAPARETE CON DIAFRAMMA
163	CE1460A	CAVO 5X4MMQ H07RN-F L=1,8MT
164	VM1310A	SCATOLA COPRI MORSETTIERA XB/XV/XVC/XG
165	MR1004A	MORSETT. 7FTW GV V0 VL CU 1+2+3/4+5+6
166	VE1075A	PRESSACAVO FV 268 RO+VITI FISSAGGIO
167	VE1110A	CONDENSATORE 6,3 µF 450VAC 50/60Hz
168	PE1810B	SCHEDA DI POTENZA BAKERLUX
169	VM1745A	SUPPORTO PER SCHEDA
170	0H6361A	LAMIERA FISSAGGIO TELERUTTORI
171	VM1075A	CLIP DI FISSAGGIO PER TELERUTTORI
172	VE1095A	TELERUTTORE GE 25A 230V 50/60

MOD:XB895

EN

Codes descriptions

1	VT1254A	OUTER GLASS XB89- XC89-
2	TB2386A	CHEFLUX XV893 DOOR LEFT COLUMN
3	TB2385A	CHEFLUX XV893 DOOR RIGHT COLUMN
4	VT1140A	INTERNAL GLASS 743x940x6 BETFL
5	CR1085A	INTERNAL GLASS UPPER HINGE
6	GN1181A	CR1085-1086 INTERNAL GLASS HINGE SEAL
7	CR1086A	INTERNAL GLASS LOWER HINGE
8	VM1511A	XBC/XVC SLEEK DOOR PIN BUSHING
9	VM1977A	CL BL DOOR UPPER FULCRUM-CAP
10	VM1978A	CL BL DOOR LOWER FULCRUM-CAP
11	VM1510A	XBC/XVC GROOVED DOOR PIN BUSHING
12	VM1680A	INTERNAL GLASS HINGE
13	VM2043A	UPPER - LOWER GLASS SUPPORT
14	TB2384B	BAKERLUX CHEFLUX DOOR UPPER LISTEL
15	TB2404A	BAKERLUX CHEFLUX DOOR LOWER LISTEL
16	VM1976A	CL BL DOOR COLUMN BLANKING CAP
17	VM2042A	INTERNAL GLASS LATERAL LOCKING SYSTEM
18	VM1490A	CHEFTOP/BAKERTOP HANDLE SCREWS COVER
19	VM1180B	HANDLE HAFT CT BT
20	VE1030A	MAGNET FOR DOOR MICROSWITCH D=22,9mm
21	VM1591A	GLASS BRACKET INT. XVC1004
40	GN1343B	XBC804-805 DOOR GASKET - GN1006A
41	GRL1266A	RIGHT LATERAL SUPPORT 10 600x400
42	GRL1265A	LEFT LATERAL SUPPORT 10 600x400
43	VM1820A	LATERAL SUPPORTS M6 FIXING BOLTS
44	TB2191A	XB89- XV89- INTERNAL WATER PIPE
45	0G1473A	XB89- XV89- FAN GUARD
46	VN1030A	MOTOR FAN D196 H81 39 BLADE NUT M8
47	RS1150A	CIRC.HEAT. ELEMENT D=230 5 TURNS
48	GN1327A	HEATING ELEMENT GASKET 100X22X0.8
49	RS1261A	BAKERLUX\CHEFLUX BREAKING FAN ELEMENT
50	GN1326A	ELEMENT SEALING
51	VT1195A	BOROSILICATE LIGHT BULB GLASS COVER
52	GN1065A	SEAL FOR LAMP GLASS COVER (PURE
53	GN1055A	OR 46x2 VMQ 70 RED
54	VE1005A	HALOGEN LAMP 33W ENERGY SAVER
55	VE1015A	LAMP HOLDER SERIE 2 FOR HALOGEN LAMP
56	TB1515A	EXTERNAL WATER PIPE + RC1165A0
57	EL1252A	ONE INLET WATER VALVE J.G.CONN.
58	GN1140A	MOLDED MOTOR SUPPORT GASKET
59	0H4305A	ST. STEEL MOTOR SHAFT SEALING DISC
60	0H3586A	ZINCATE MOTOR GUARD PLATE XBC-XVC
61	VN1130A	330W 230V 50/60HZ MOTOR
62	0H4851A	BRACKET SUPPORT WIRING HARNESS STD
100	0D2210A	CHEF-BAKERLUX 89- EXTERNAL LEFT PANEL
101	0F1469A	XB89- XV89- EXTERNAL BACK PANEL
102	0D2225A	XB895 DYNAMIC EXTERNAL RIGHT SIDE PANEL
103	0E1331B	CHEFLUX-BAKERLUX EXTERNAL BOTTOM PANEL
104	0H6240A	BAKERLUX CHEFLUX ST. STEEL CONTROL PANEL
105	0D2125A	BAKERLUX CHEFLUX COVER
106	0H6395A	S. 5-E BAKERTOP FEET BRACKET
107	PD1066B	BI-COMPONENT FOOT H100
108	PD1063A	CT BT FOOT STOP BRACKET
109	GN1400A	U-TRAP SEAL
110	VM2039A	DRAIN BEND FIXING RING
111	VL1026A	BEND FOR DRAIN PIPE
112	VM2035A	DRAIN PIPE SUPPORT
113	0H6333A	BL CL THREADED DOOR COUNTER BRACKET
114	VM1975A	DOOR SUPPORT LOWER BRACKET
115	VM1195A	HOLES BLANKING PLATE XVC204/304/504/704
116	VM1192A	CT BT DOOR SPRING LATCH COVER
117	VM1191A	CT BT LEFT DOOR SPRING LATCH
118	VM1461A	XBC/XVC LEFT DOOR LATCH CAP
119	VM1974A	BOARD CLOSING PLATE
120	VE1020A	MAGNETIC DOOR MICROSWITCH
121	VM1201A	MAGNETIC SUPPORT PLATE FOR DOOR MICROSW.
122	VM1460A	XBC/XVC RIGHT DOOR LATCH CAP
123	VM1190A	CT BT RIGHT DOOR SPRING LATCH
124	0H2560A	XBC/XVC ZINC PLAT. DOOR COUNTERBRACKET
125	VM1165B	CT BT DOOR UPPER BRACHET
126	VM1166A	CAP FOR DOOR UPPER STIRRUP XVC204/304/5
127	GN1275A	XBC/XVC BLACK CHIMNEY SEALING
128	0H3790A	CHIMNEY HOLDING PLATE
129	0H1450A	XB-XV-XG ST. STEEL MUFFLE FRONT CORNER
130	VN1120B	12V COOLING DOWN FAN
131	VM1555A	CT BT COOLING DOWN FAN SUPPORT
132	VM1556A	XBC-XVC COOLING FAN GUARD
133	RC1002A	10M-8F J.G. TERMINAL REDUCTION FITTING
134	TB2237A	Ø10 WATER MAIN CONNECTION PIPE
135	VL1034A	Ø10 MESH100 WATER FILTER
136	RC1360A	10 - 10 JG ELBOW FITTING
137	RC1365A	3/4"-10 JG FEMALE CONNECTION
138	MS1010A	BAKERLUX/CHEFLUX STICKER WITH SERIGRAPHY
139	VM1973A	BAKERLUX DYNAMIC BOARD
140	PE1985A	BAKERLUX CONTROL BOARD + COVER
141	CE1305A	RJ45 - RJ45 CABLE L=2MT
142	PE1971A	RJ45 CONNECTION + RESET POINT
160	0H6771A	BL CL DYNAMIC ELECTRIC COMPONENTS HOLDER
161	VM1750A	TERMINAL BOARD
162	VM1505A	WALL PASSING WITH DIAPHRAGM
163	CE1460A	CABLE 5X4MMQ H07RN-F L=1,8MT
164	VM1310A	COVER FOR TERMINAL BOX XB/XV/XVC/XG
165	MR1004A	TERMINAL 7FTW GV V0 VL CU 1+2+3/4+5+6
166	VE1075A	WIRE CLAMP FV 268 RO + FIXING SCREWS
167	VE1110A	CONDENSER 6,3 µF 450VAC 50/60Hz
168	PE1810B	BAKERLUX POWER CARD
169	VM1745A	BOARD SUPPORT
170	0H6361A	REMOTE CONTROL SWITCH FIXING PANEL
171	VM1075A	PLASTIC CLIP TO FIX CONTACTORS
172	VE1095A	REMOTE CONTROL SWITCH GE 25A 230V