MOD:XV393

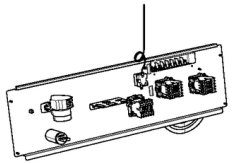

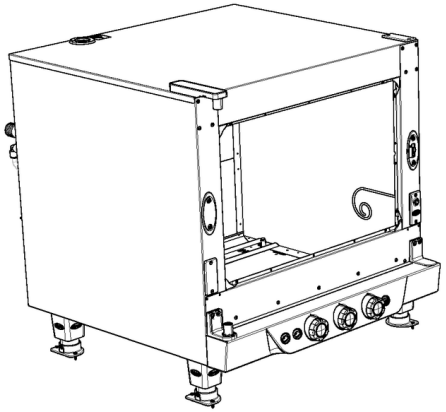

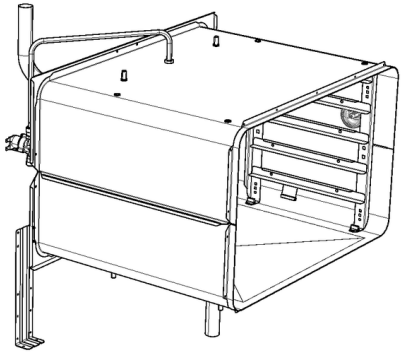

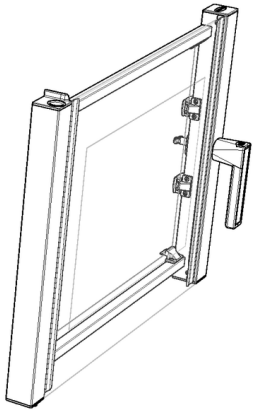

MOD:XV393

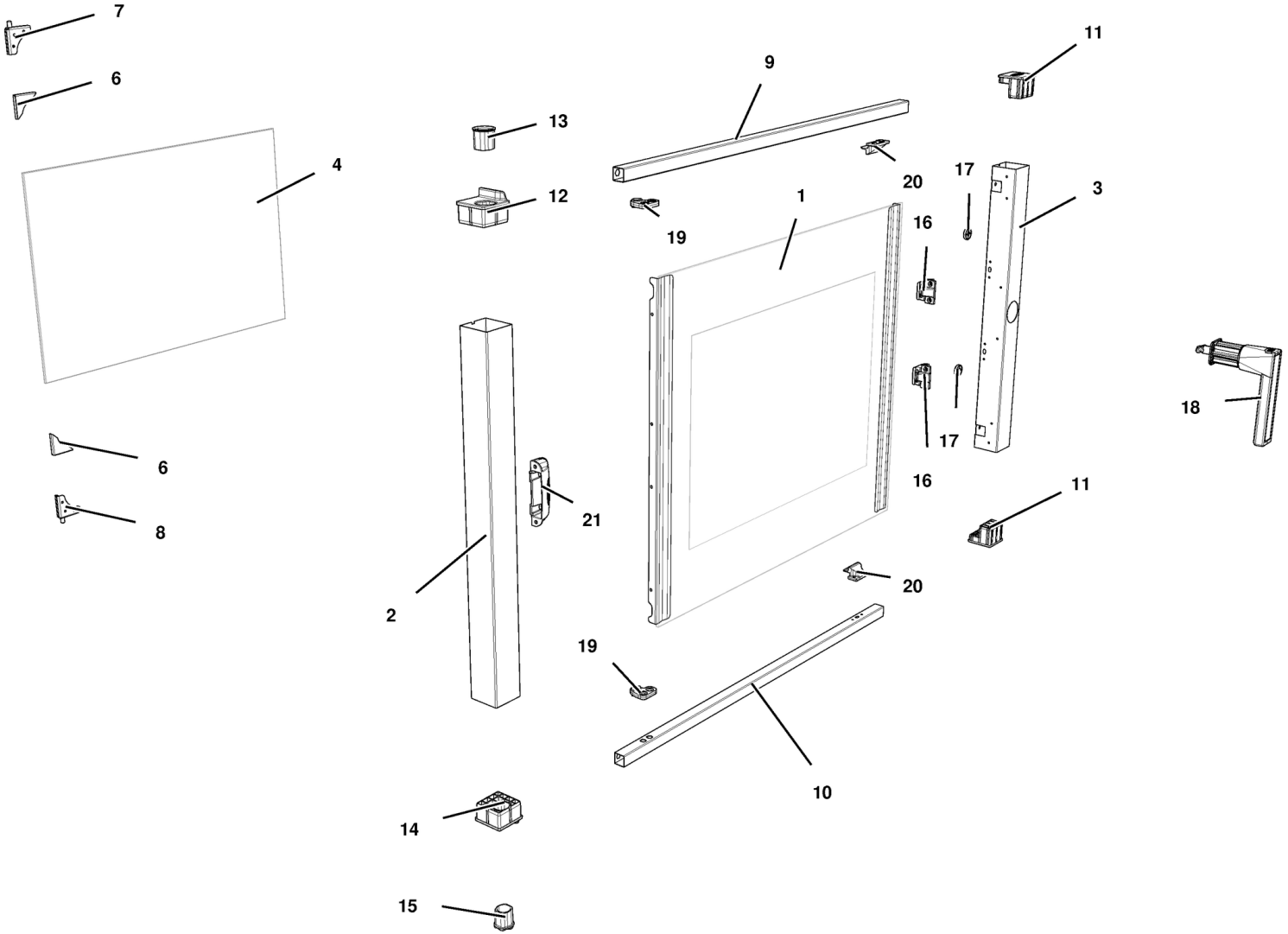

MOD:XV393

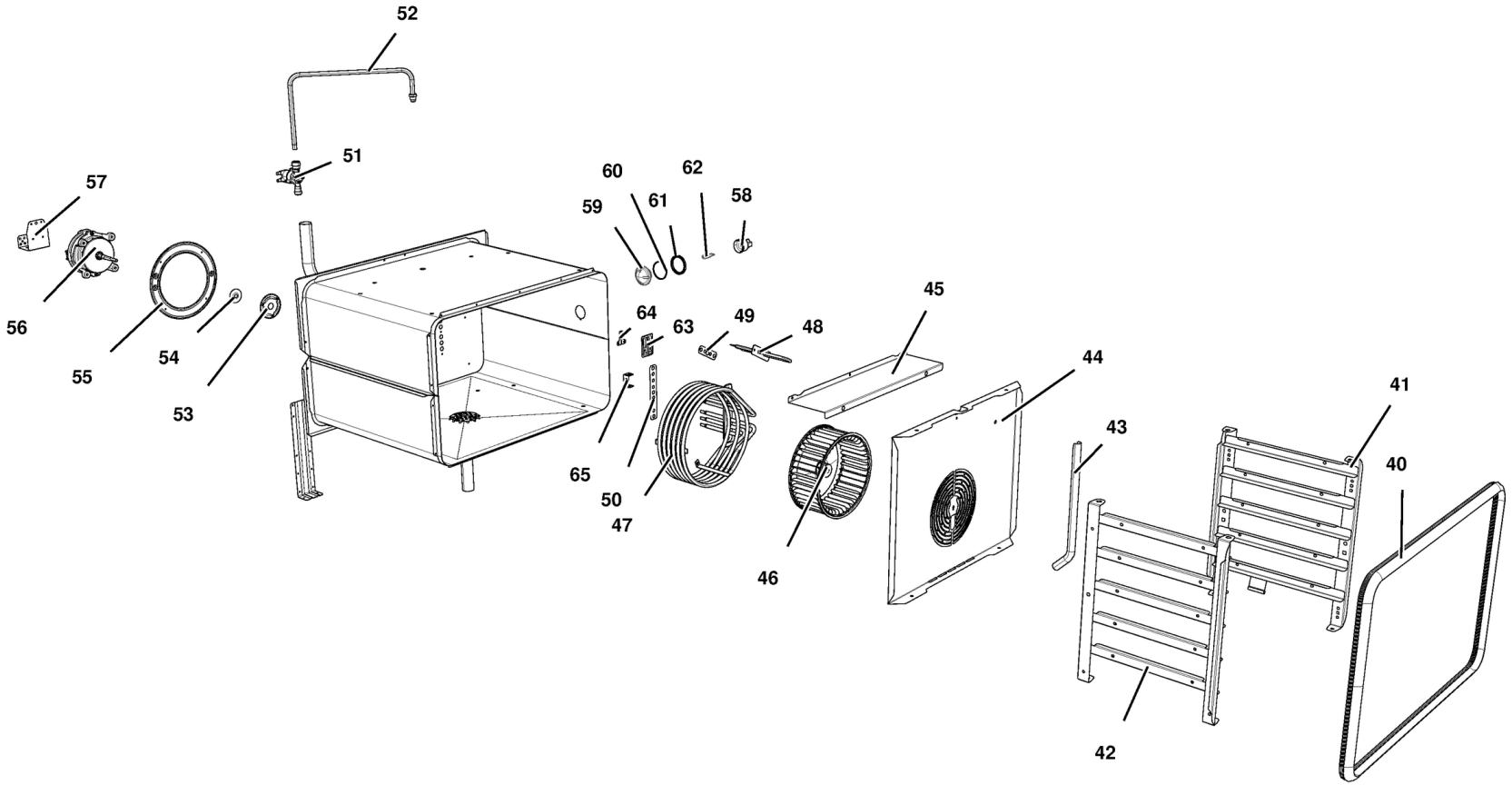
52
51
57
60
62
59
61
58
56
64
63
49
48
45
55
54
53
65
50
47
46
44
43
41
40
42

MOD:XV393

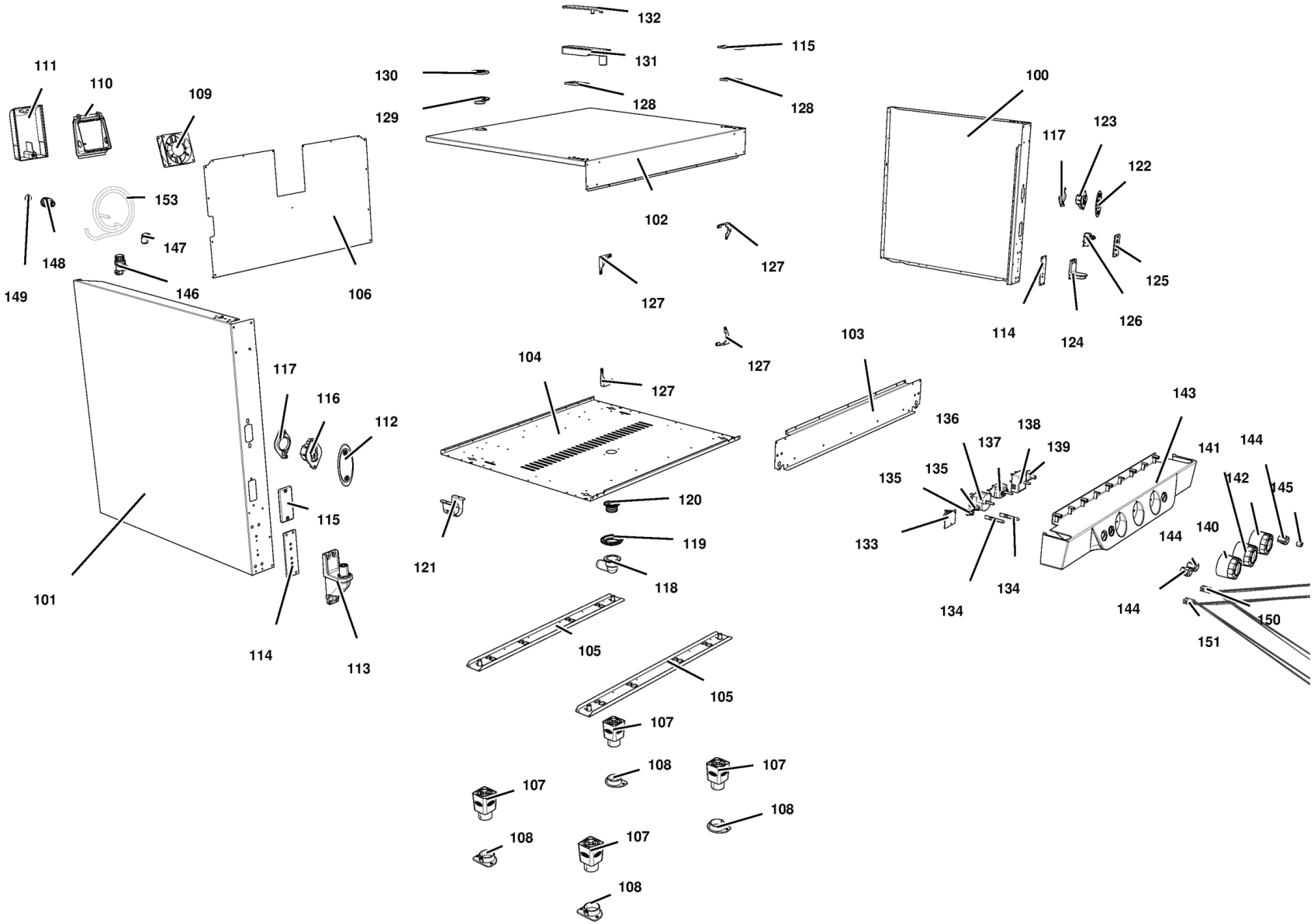

132
115
131
130
128
128
129
111
110
109
100
117
123
122
153
102
147
148
127
125
149
146
106
127
126
114
124
103
127
104
127
117
116
112
143
136
138
137
139
141
144
135
135
142
145
120
115
140
133
144
119
121
118
134
101
134
144
150
151
114
113
105
105
107
108
107
107
108
108
107
108

MOD:XV393

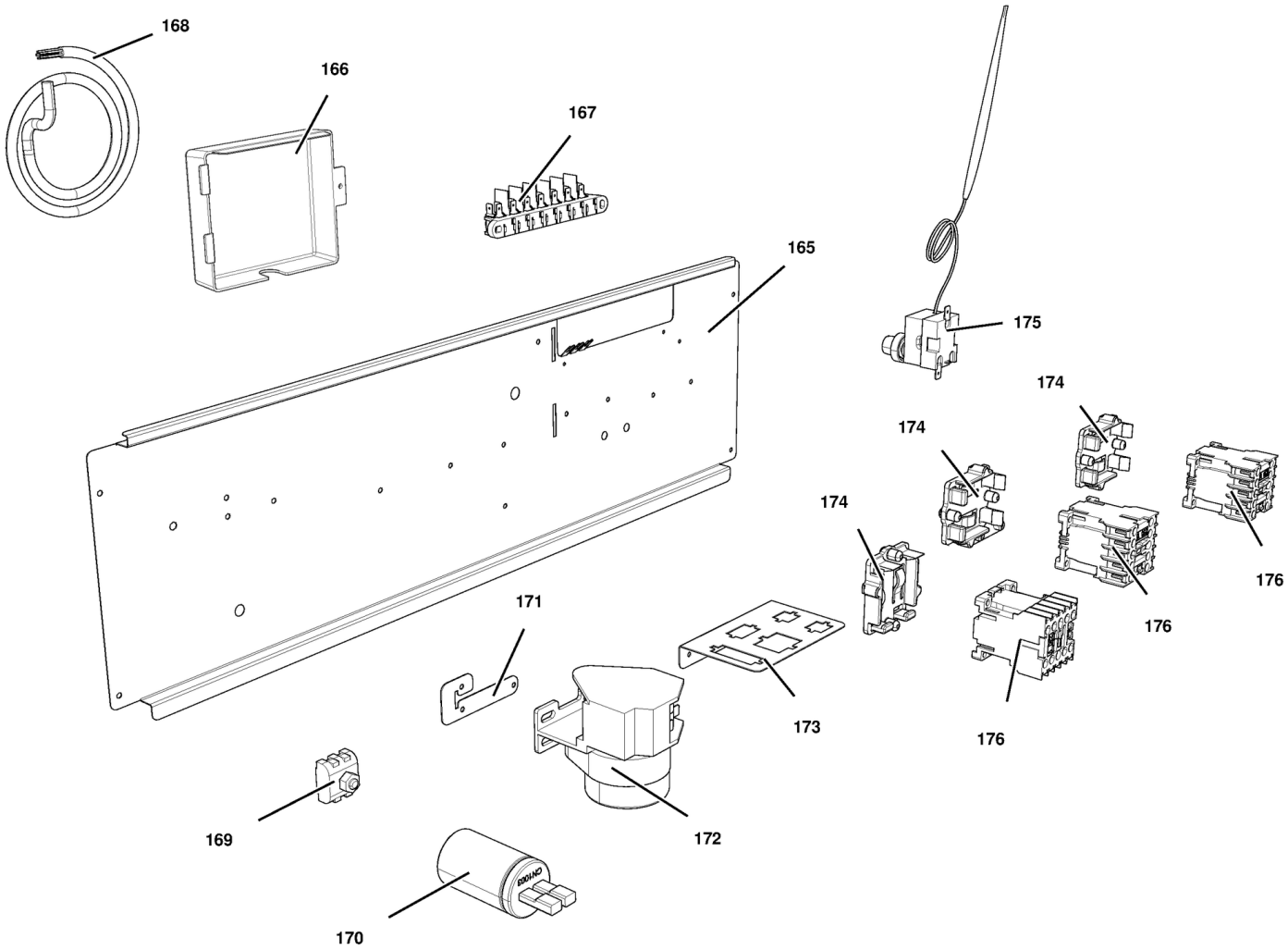

MOD:XV393

IT

Descrizione codici

1	VT1272A	VETRO EST. 647X555 NERO CHEFLUX
2	TB2777A	COLONNINA SX CHEFLUX XV393
3	TB2776A	COLONNINA DX CHEFLUX XV393
4	VT1095A	VETRO INTERNO 633X432X6 BETFL XVC304
6	GN1181A	GUARNIZIONE CERN VETRO INT CR1085-1086
7	CR1085A	CERNIERA VETRO INT INOX SUP
8	CR1086A	CERNIERA VETRO INT INOX INF
9	TB2778A	LISTELLO SUP CHEFLUX
10	TB2779A	LISTELLO INF CHEFLUX
11	VM1976A	TAPPO ESTETICO COLONNINA PORTA CL BL
12	VM1170B	TAPPO FULCRO SUP. PORTA XVC204/304/504/7
13	VM1511A	BOCCOLA LISCIA PERNO PORTA CHEFFTOP
14	VM1171B	TAPPO FULCRO INF. PORTA XVC204/304/504/7
15	VM1510A	BOCCOLA SCANALATA PERNO PORTA XBC/XVC
16	VM2042A	ASSIEME CHIUSURA VETRO INTERNO LAT
17	VM2008A	DISTANZIALE PER MICROPORTA MECC
18	VM1180B	IMPUGNATURA MANIGLIA CT BT
19	VM1680A	CERNIERA APERTURA VETRO INTERNO
20	VM2043A	SUPPORTO VETRO SUP - INF
21	VM1591A	STAFFA SPINGIVETRO INTERNO XVC1004
41	GRL1220A	SUPPORTO LAT. DX 5 GN1/1 XVC305/315G
42	GRL1221A	SUPPORTO LAT. SX 5 GN1/1 XVC305/315G
43	TB2320A	TUBO UMIDITA' XVC305E/705E Ø16x1
44	0G1490A	CARTER ARIA XVC305E
45	0G1493A	DISTANZIALE CARTER XVC305E/705E
46	VN1030A	VENTOLA D196 H81 39 PALE DADO M8
47	RS1002A	RES. CIRCOLARE 6750W 230V 6 SPIRE
48	RS1261A	RESISTENZA MOTORE BAKERLUX\CHEFLUX
49	GN1326A	GUARNIZIONE RESISTENZA 71x19 G6.25
50	GN1085A	GUARNIZIONE RESISTENZA 141x24 G6.25
51	EL1251A	ELETTROVALVOLA H2O 1 VIA RID.

52	TB1515A	TUBO EST. UMIDITA' + RC1165A0
53	0H4305A	DISCO TENUTA ALBERO MOTORE INOX STP
54	GN1140A	GUARNIZIONE PORTAMOTORE STAMP.
55	0H3586A	LAMIERA PROTEZIONE MOTORE ZINCATO
56	VN1130A	MOTORE FORNO 330W 230V 50/60HZ
57	0H6741A	STAFFA CABLAGGIO AISI-304
58	VE1015A	PORTA LAMPADA SERIE 2 PER LAMPADA
59	VT1195A	VETRO COPRILAMPADA BOROSILICATO TEMPRATO
60	GN1055A	OR 46x2 VMQ 70 ROSSO
61	GN1065A	GUARNIZIONE PORTALAMPADA DE=53.2
62	VE1005A	LAMPADA HALOPIN 25W
63	0H7030A	COPERCHIO INGRESSO BULBO
64	GN1531A	GUARNIZIONE TENUTA INGRESSO BULBO
65	0H4820A	STAFFA SOSTEGNO BULBO
100	0D2258A	FIANCO DESTRO CHEFLUX XV393
101	0D2257A	FIANCO SINISTRO CHEFLUX XV393
102	0D2256A	COPERCHIO CHEFLUX
103	0H7104A	LAMIERA CRUSCOTTO CHEFLUX
104	0E1342A	FONDO ESTERNO CHEFLUX
105	0H1019A	LAMIERA RINFORZO PIEDI H100 CT
106	0F1481A	SCHIENA CHEFLUX XV393
107	PD1066B	PIEDE H100 PLASTICA BICOMPONENTE
108	PD1063A	STAFFA BLOCCAGGIO PIEDE CT BT
109	VN1165A	VENTOLA RAFFREDDAMENTO 230Vac 50/60Hz 12
110	VM1555A	SUPPORTO VENTOLA RAFFREDDAMENTO CT BT
111	VM1556A	PROTEZIONE VENTOLA RAFFREDAMENTO CT-BT
112	VM1461A	COPERCHIO SX SCROCCO PORTA XBC/XVC
113	VM1975A	STAFFA INFERIORE SOSTEGNO PORTA
114	0H6333A	CONTROSTAFFA PORTA FILETTATA BL CL
115	VM1195A	PIASTRINA COPRIFORI XVC204/304/504/704
116	VM1191A	SCROCCO MANIGLIA SX CT BT

117	VM1192A	COPERCHIO SCROCCO MANIGLIA CT BT
118	VL1026A	CURVA PER TUBO DI SCARICO
119	VM2039A	ANELLO FISSAGGIO CURVA DI SCARICO
120	GN1400A	GUARNIZIONE SIFONE
121	VM2035A	SUPPORTO PER TUBO DI SCARICO
122	VM1460A	COPERCHIO DX SCROCCO PORTA XBC/XVC
123	VM1190A	SCROCCO MANIGLIA DX CT BT
124	VM1974A	PIASTRINA CHIUSURA CRUSCOTTO
125	VM1200A	PIASTRINA SUPPORTO MICROPORTA MECCANICO
126	VE1295A	MICROINTERRUTTORE PORTA MK 16A 230V UL
127	0H1450A	ANGOLO FACCIATA MUFFOLA INOX XB-XV-XG
128	0H2560A	CONTROSTAFFA ZINCATA PORTA C.T.
129	GN1275A	GUARNIZIONE CAMINO SILICONE NERO XVC
130	0H3790A	LAMIERA TENUTA CAMINO
131	VM1165B	STAFFA SUPERIORE PORTA CT BT
132	VM1166A	COPERCHIO STAFFA SUPERIORE PORTA
133	TM1001C	BUZZER ELETTRONICO 15s 120V
134	VE1535A	LED BIANCO 230V
135	VM1762A	SUPPORTO LAMPADA INTERNO
136	TM1005A	TIMER MI2 60 MIN 250V 16A
137	TR1100A	TERMOSTATO REG. 269°C 55.19052.80
138	VE1556A	REGOLATORE ENERGIA 240V
139	VE1561A	PULSANTE BIPOLARE NA/NA
140	MN1112A	MANOPOLA TIMER CHEFLUX BAKERLUX
141	MN1111A	MANOPOLA LUX TERMOSTATO GRADI CELSIUS
142	MN1113A	MANOPOLA UMIDITA CHEFLUX BAKERLUX
143	VM2203A	CRUSCOTTO MANUALE CHEFLUX
144	VM2009A	SUPPORTO ELLITTICO D16 ARGENTO
145	VM2007A	TASTO ARGENTO OPACO VELOCITA VENTOLA
146	VL1034B	FILTRO ACQUA D10 MESH100
147	RC1360A	RACCORDO GOMITO JG 10-10

148	RC1365A	RACCORDO JG FEMMINA 3/4"-10
149	GN1200A	GUARNIZIONE D24 RACCORDO 3/4 SILICONE
150	VE1530A	GEMMA ELLITTICA AZZURRA TERMOMETRO ORO
151	VE1585A	GEMMA ELLITTICA AZZURRA SINUSOIDE ORO
153	TB2237A	TUBO Ø10 ALLACCIAMENTO RETE
165	0H7141A	PORTACOMPONENTI CHEFLUX XV393
166	VM1310A	SCATOLA COPRI MORSETTIERA XB/XV/XVC/XG
167	MR1004A	MORSETT. 7FTW GV V0 VL CU 1+2+3/4+5+6
168	CE1355A	CAVO 5X2,5MMQ H07RN-F L=1,5MT
169	VM1750A	MORSETTO A PETTINE
170	CN1003A	CONDENSATORE CORAZZATO 6,3 uF
171	0H6346A	LAMIERINO FISSAGGIO INVERTITORE
172	VE1555A	INVERTITORE DI MARCIA
173	0H6769A	LAMIERA FISSAGGIO CONNETTORI
174	VM1056A	STAFFA TELERUTTORE PICCOLO VE1115A
175	TR1136A	TERMOSTATO SIC. UNIP. 330°C
176	VE1115A	MINICONTATTORE QUADRIPOLARE 20 A 230 V

MOD:XV393

EN

Codes descriptions

1	VT1272A	CHEFLUX XV393 EXTERNAL BLACK GLASS
2	TB2777A	CHEFLUX XV393 DOOR LEFT COLUMN
3	TB2776A	CHEFLUX XV393 DOOR RIGHT COLUMN
4	VT1095A	INNER GLASS 633X432X6 BETFL XVC304
6	GN1181A	INTERNAL GLASS HINGE SEAL
7	CR1085A	INTERNAL GLASS UPPER HINGE
8	CR1086A	INTERNAL GLASS LOWER HINGE
9	TB2778A	CHEFLUX XV393 DOOR UPPER BAR
10	TB2779A	CHEFLUX XV393 DOOR LOWER BAR
11	VM1976A	CL BL DOOR COLUMN BLANKING CAP
12	VM1170B	UPPER DOOR FULCRUM CAP
13	VM1511A	XBC/XVC SLEEK DOOR PIN BUSHING
14	VM1171B	DOOR LOWER FULCRUM CAP
15	VM1510A	XBC/XVC GROOVED DOOR PIN BUSHING
16	VM2042A	INTERNAL GLASS LATERAL LOCKING SYSTEM
17	VM2008A	SPACER FOR MICROSWITCH
18	VM1180B	ChefTop/BakerTop HANDLE HAFT
19	VM1680A	INTERNAL GLASS HINGE
20	VM2043A	UPPER - LOWER GLASS SUPPORT
21	VM1591A	GLASS BRACKET INT. XVC1004
41	GRL1220A	5 GN1/1 ST. STEEL RIGHT LATERAL SUPPORT
42	GRL1221A	5 GN1/1 ST. STEEL LEFT LATERAL SUPPORT
43	TB2320A	XVC305E/705E INTERNAL WATER PIPE Ø16x1
44	0G1490A	XVC305E FAN GUARD
45	0G1493A	XVC305E/705E FAN GUARD SPACER
46	VN1030A	MOTOR FAN D196 H81 39 BLADE NUT M8
47	RS1002A	6750W 230V D230 6 TURNS HEATING ELEMENT
48	RS1261A	BAKERLUX\CHEFLUX BREAKING FAN ELEMENT
49	GN1326A	ELEMENT SEALING 70X22X0.8
50	GN1085A	HEATING ELEMENT GASKET 141x24 G6.25
51	EL1251A	1-WAY WATER SOLENOID VALVE BROWN
52	TB1515A	EXTERNAL WATER PIPE + RC1165A0
53	0H4305A	ST. STEEL MOTOR SHAFT SEALING DISC
54	GN1140A	MOTOR SUPPORT GASKET
55	0H3586A	ZINCATE MOTOR GUARD PLATE XBC-XVC
56	VN1130A	330W 230V 50/60HZ MOTOR
57	0H6741A	AISI-304 WIRING SUPPORT BRACKET
58	VE1015A	LAMP HOLDER SERIE 2 FOR HALOGEN LAMP
59	VT1195A	BOROSILICATE LIGHT BULB GLASS COVER
60	GN1055A	46x2 RED O-RING LAMP GLASS COVER SEAL
61	GN1065A	LAMP GLASS COVER SEAL
62	VE1005A	HALOGEN LAMP 33W ENERGY SAVER
63	0H7030A	INLET COVER BULB
64	GN1531A	PROBE SEALING
65	0H4820A	BULB HOLDING BRACKET
100	0D2258A	CHEFLUX XV393 EXTERNAL RIGHT PANEL
101	0D2257A	CHEFLUX XV393 EXTERNAL LEFT PANEL
102	0D2256A	CHEFLUX XV393 EXTERNAL COVER
103	0H7104A	CHEFLUX XV393 CONTROL HOLDING PANEL
104	0E1342A	CHEFLUX XV393 EXTERNAL BOTTOM PANEL
105	0H1019A	BRACKET FOR CHEFTOP H100 FEET
106	0F1481A	CHEFLUX XV393 EXTERNAL BACK PANEL
107	PD1066B	BI-COMPONENT FOOT H100
108	PD1063A	CT BT FOOT STOP BRACKET
109	VN1165A	COOLING FAN 230V
110	VM1555A	CT BT COOLING DOWN FAN SUPPORT
111	VM1556A	XBC-XVC COOLING FAN GUARD
112	VM1461A	XBC/XVC LEFT DOOR LATCH CAP
113	VM1975A	DOOR SUPPORT LOWER BRACKET
114	0H6333A	BL CL THREADED DOOR COUNTER BRACKET
115	VM1195A	HOLES BLANKING PLATE XVC204/304/504/704
116	VM1191A	CT BT LEFT DOOR SPRING LATCH
117	VM1192A	CT BT DOOR SPRING LATCH COVER
118	VL1026A	BEND FOR DRAIN PIPE
119	VM2039A	DRAIN BEND FIXING RING
120	GN1400A	U-TRAP SEAL
121	VM2035A	DRAIN PIPE SUPPORT
122	VM1460A	XBC/XVC RIGHT DOOR LATCH CAP
123	VM1190A	CT BT RIGHT DOOR SPRING LATCH
124	VM1974A	BOARD CLOSING PLATE
125	VM1200A	DOOR MECHANIC MICROSWITCH SUPPORT PLATE
126	VE1295A	DOOR MICROSWITCH MK 16A 230V UL
127	0H1450A	XB-XV-XG ST. STEEL MUFFLE FRONT CORNER
128	0H2560A	XBC/XVC ZINC PLAT. DOOR COUNTERBRACKET
129	GN1275A	XBC/XVC BLACK CHIMNEY SEALING
130	0H3790A	CHIMNEY HOLDING PLATE
131	VM1165B	CT BT DOOR UPPER BRACKET
132	VM1166A	CAP FOR DOOR UPPER STIRRUP XVC204/304/5
133	TM1001C	ELECTRONIC BUZZER 15 SEC 120V
134	VE1535A	WHITE LED 230V
135	VM1762A	INNER LAMP SUPPORT
136	TM1005A	TIMER MI2 60 MIN 250V 16A
137	TR1100A	269°C ADJUSTABLE THERMOSTAT 55.19052.80
138	VE1556A	THERMAL SWITCH 240V
139	VE1561A	BIPOLAR SWITCH NA/NA
140	MN1112A	CHEFLUX BAKERLUX TIMER KNOB
141	MN1111A	CHEFLUX BAKERLUX THERMOSTAT KNOB
142	MN1113A	CHEFLUX BAKERLUX HUMIDITY CONTROL KNOB
143	VM2203A	CHEFLUX MANUAL CONTROL BOARD
144	VM2009A	ELLIPTICAL SILVER SUPPORT D16
145	VM2007A	FAN SPEED SILVER BUTTON
146	VL1034B	MESH WATER FILTER D10
147	RC1360A	10 - 10 JG ELBOW FITTING
148	RC1365A	3/4"-10 JG FEMALE CONNECTION
149	GN1200A	3/4 CONNECTION SEAL D=24 RUBBER+NET
150	VE1530A	BLUE LIGHT COVER GOLD THERMOMETER
151	VE1585A	BLUE LIGHT COVER GOLD SINUSOID
153	TB2237A	Ø10 WATER MAIN CONNECTION PIPE
165	0H7141A	CHEFLUX XV393 ELECTRIC COMPONENTS HOLDER
166	VM1310A	COVER FOR TERMINAL BOX XB/XV/XVC/XG
167	MR1004A	TERMINAL 7FTW GV V0 VL CU 1+2+3/4+5+6
168	CE1355A	CABLE 5 X 2,5 MMQ H07RNF L = 1,5 MT
169	VM1750A	BRASS COMB CLAMP
170	CN1003A	CONDENSER6,3 Uf
171	0H6346A	INVERTER FIXING PLATE
172	VE1555A	REVERS.SWITCH MOTOR P19.5J.02.H6.17
173	0H6769A	CONNECTORS FIXING PANEL
174	VM1056A	SUPPORT MINICONTACTOR VE1115A
175	TR1136A	SAFETY THERMOSTAT UNIP. 330°C
176	VE1115A	MINICONTACTOR WITH 4 POLES 20 A 230 V