MOD:XF193-B

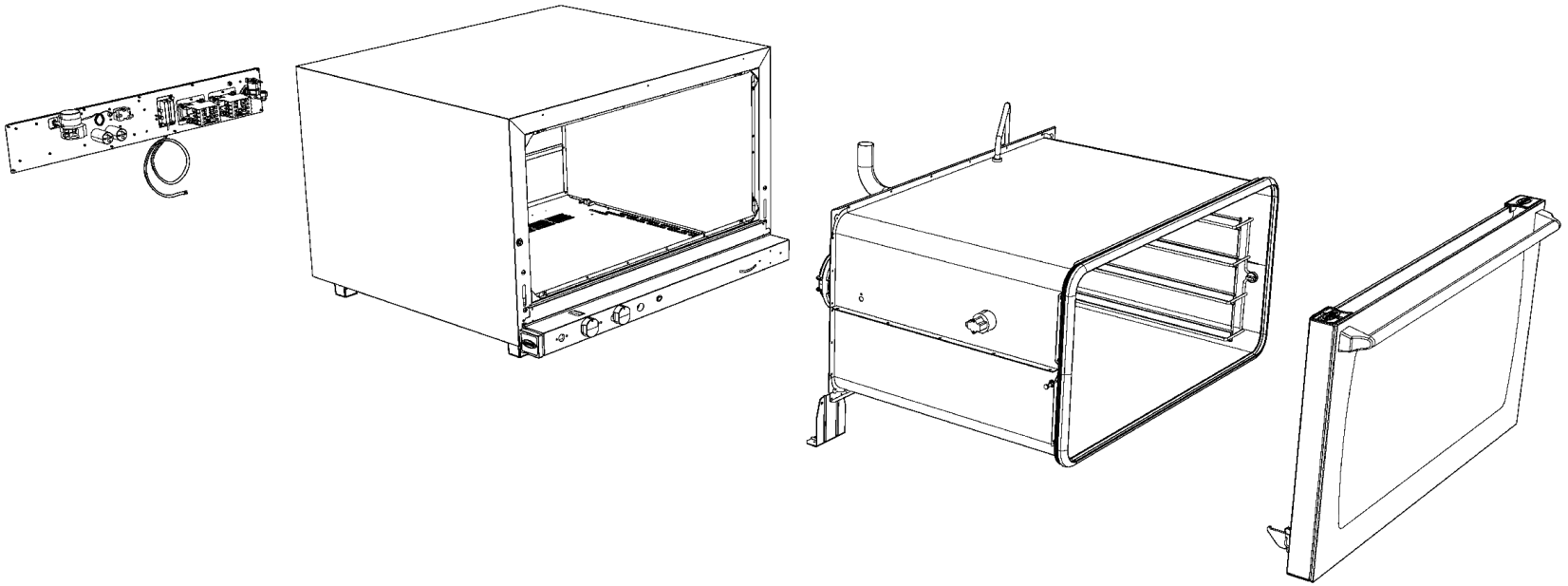

MOD:XF193-B

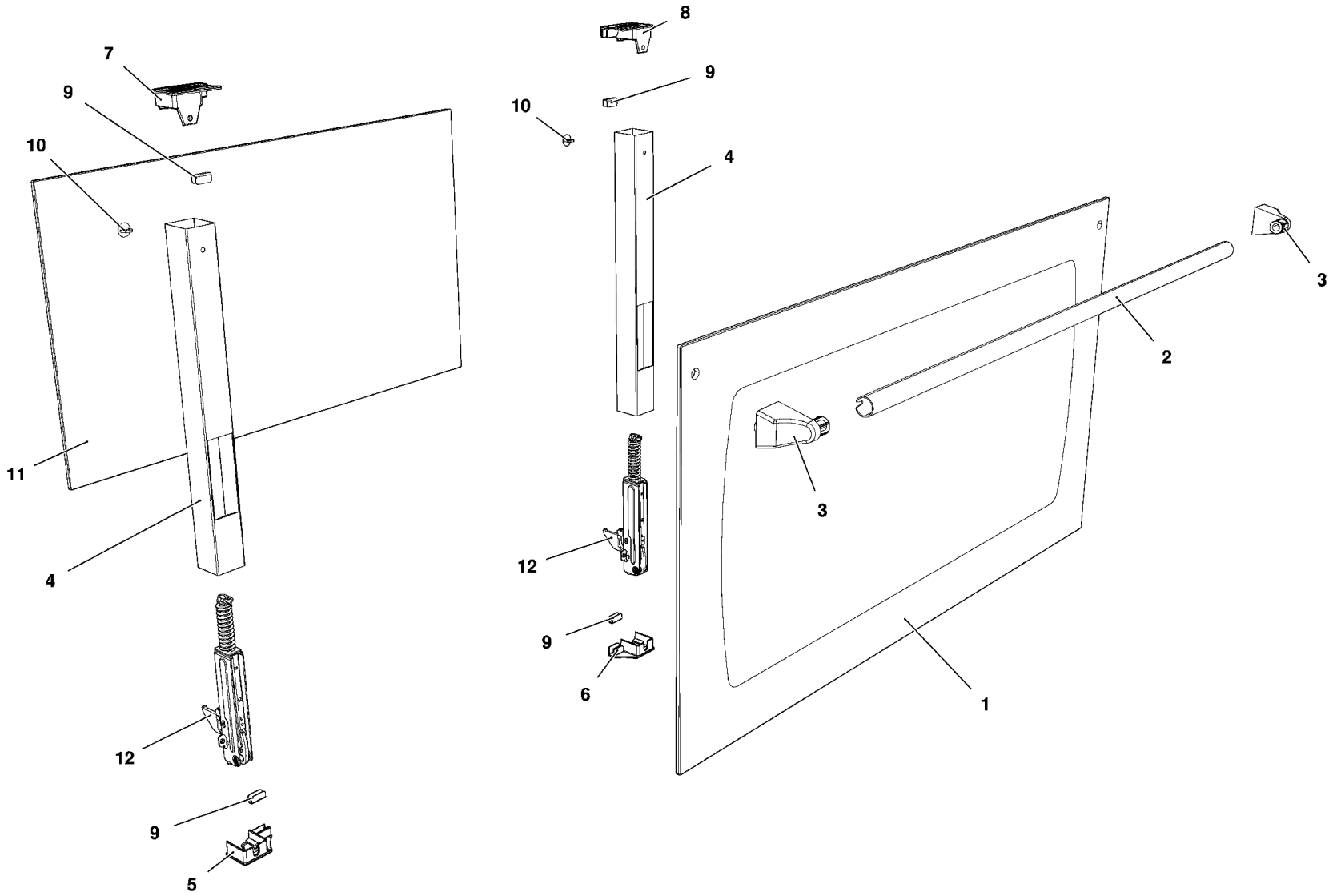

MOD:XF193-B

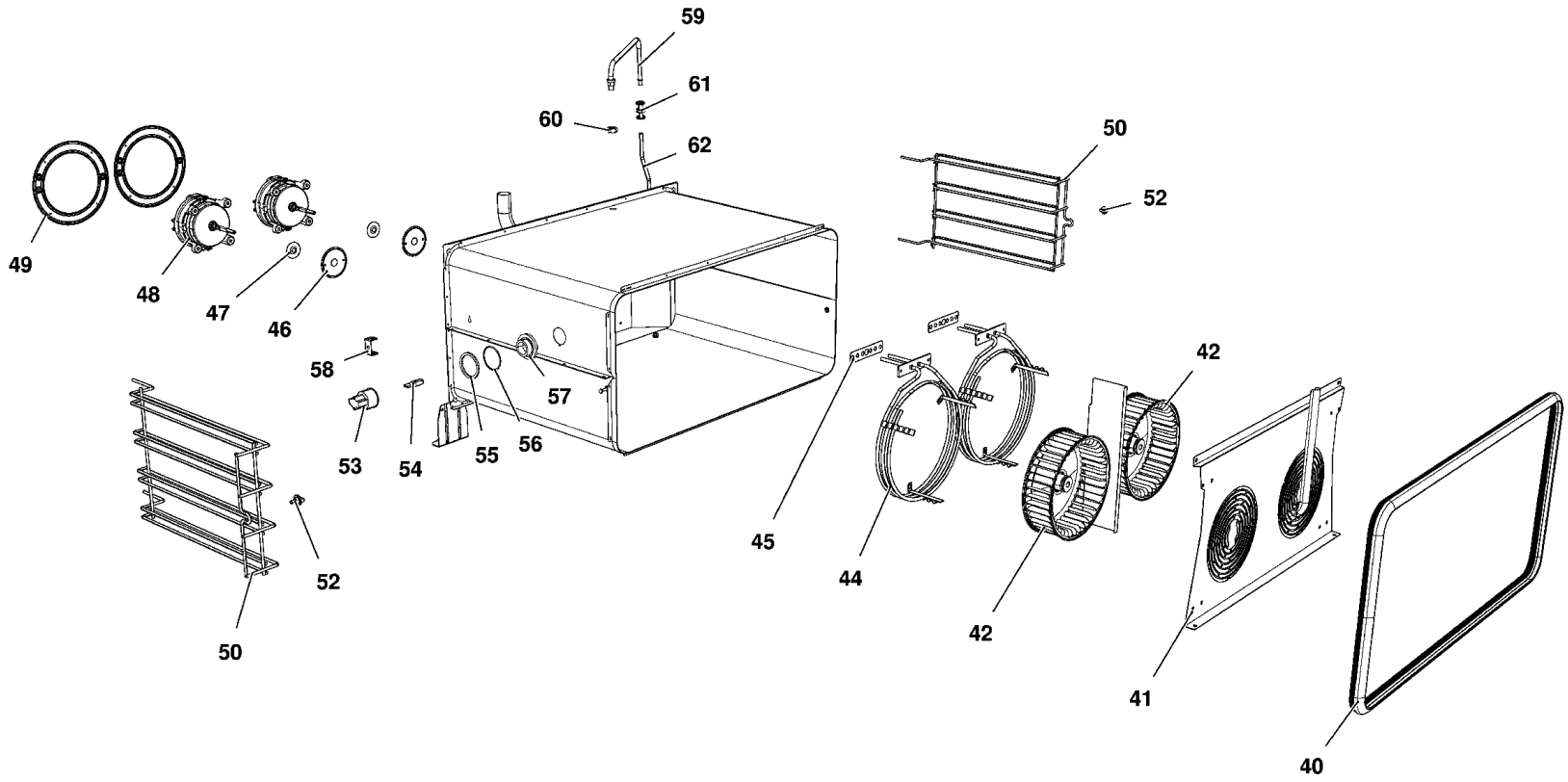

MOD:XF193-B

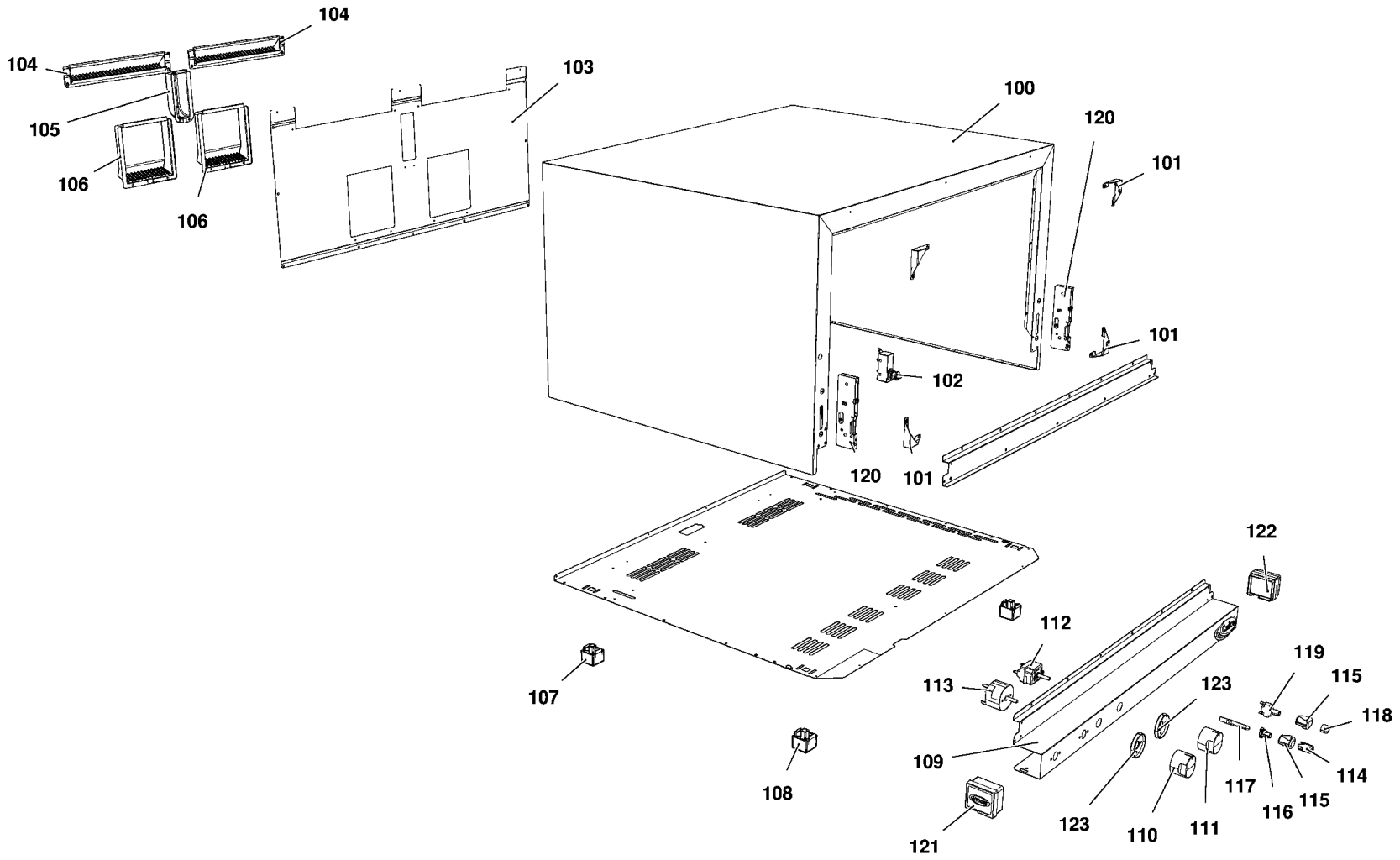
104
104
105
106
106
103
100
120
101
101
102
120
101
122
112
107
113
119
115
123
118
109
114
108
117
116
115
121
123
110
111

MOD:XF193-B

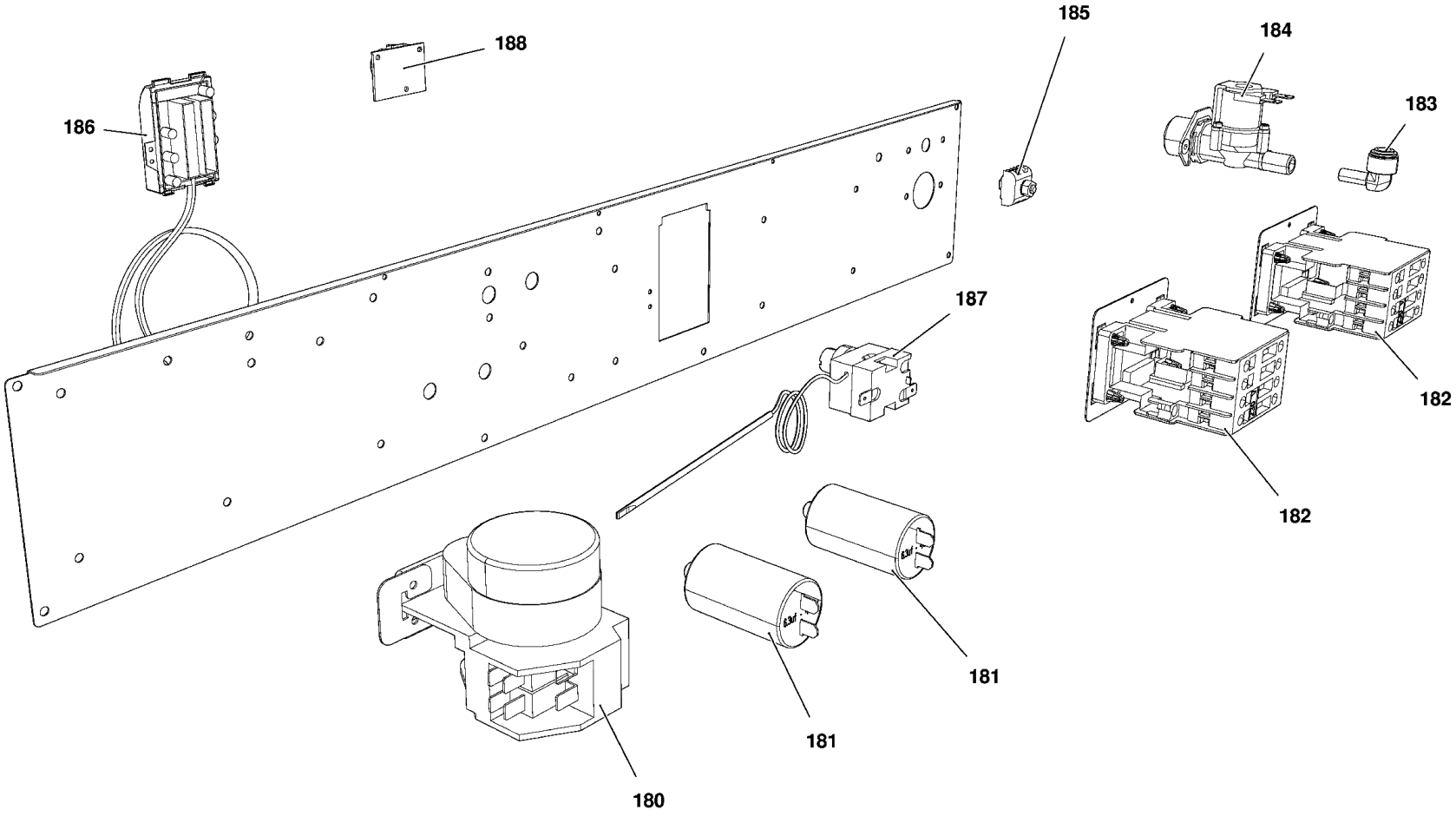

MOD:XF193-B

IT

Descrizione codici

1	VT1072A	VETRO EST. 798X424 NERO XF190/193/195
2	0H1930B	TUBO MANIGLIA L= 718 Ø18x1
3	MG1015B	TERMINALE MANIGLIA L.MISS/L.MICRO/CHEFTO
4	0H1425B	COLONNINA SX/DX L.M. ARIA-ROSSEL 40x40x1
5	VM1051A	TAPPO INF. SX COLONNINA PORTA
6	VM1050A	TAPPO INF. DX COLONNINA PORTA
7	VM1046B	TAPPO SUP. SX COLONNINA PORTA
8	VM1045B	TAPPO SUP. DX COLONNINA PORTA
9	GN1265A	GUARNIZIONE VETRO INTERNO XVC054/104
10	VM1025A	TAPPO NYLON PA66 V2 GRIGIO Ø16
11	VT1070B	VETRO INTERNO 715X415X6 BETFL
12	CR1050A	CERNIERA PORTA FORNO RIBALTA XVC104-LM
40	GN1354A	GN1110A-GUARNIZIONE PORTA LM ROSSELLA
41	0G1125C	CARTER ARIA LM ROSSELLA
42	VN1025A	VENTOLA D=196 H=61 38 PALE INOX DADO M8
42	VN1025A	VENTOLA D=196 H=61 38 PALE INOX DADO M8
44	RS1090A	RESISTENZA CIRCOLARE D=230 3 SPIRE
45	GN1327A	GUARNIZIONE RES. 100X22
46	0H3020A	DISCO TENUTA ALBERO MOTORE
47	GN1140A	GUARNIZIONE PORTAMOTORE STAMP.
48	VN1130A	MOTORE FORNO 330W 230V 50/60HZ
49	0H3586A	LAMIERA PROTEZIONE MOTORE ZINCATO
50	GRL1025A	GRIGLIA LATERALE DX/SX CROMATA
50	GRL1025A	GRIGLIA LATERALE DX/SX CROMATA
52	VM1815A	NOTTOLINO M6 CROMATO FISS. GRIGLIE
53	VE1015A	PORTA LAMPADA SERIE 2 PER LAMPADA
54	VE1005A	LAMPADA HALOPIN 25W
55	GN1065A	GUARNIZIONE PORTALAMPADA DE=53.2
56	GN1055A	OR 46x2 VMQ 70 ROSSO
57	VT1195A	VETRO COPRILAMPADA BOROSILICATO TEMPRATO
58	0H4820A	STAFFA SOSTEGNO BULBO
59	0H1990A	TUBO EST. UMIDITA' + RC1165A0
60	RC1170A	DADO M14 H=8 CH=22 INOX
61	EL1055A	RIDUZIONE INTERMEDIA D10-D8
62	TB2034A	TB1815A-IMPIANTO IDRICO FORNI LMS
100	0D1285E	MANTELLO LM ROSSELLA
101	0H1450A	ANGOLO FACCIATA MUFFOLA INOX XB-XV-XG
102	VE1295A	MICROINTERRUTTORE PORTA MK 16A 230V UL
103	0F1095C	SCHIENA LM ROSSELLA
104	VM1950A	GRONDAIA PLASTICA
105	VM1951A	CUFFIA COPRICAMINO IP
106	VM1952A	COPRIMOTORE IP
107	PD1001A	PIEDINO 35X35 H26 PLASTICA+GOMMA GRIGIO
108	PD1001A	PIEDINO 35X35 H26 PLASTICA+GOMMA GRIGIO
109	0D1425C	CRUSCOTTO COMANDI MANUALE INOX L.M. 800
110	MN1090B	MANOPOLA TIMER 0-60 MIN LM
111	MN1091B	MANOPOLA SERIGR. TERMOSTATO 80-260°C
112	TR1100A	TERMOSTATO REG. 269°C 55.19052.80
113	TM1005A	TIMER MI2 60 MIN 250V 16A
114	VE1530A	GEMMA ELLITTICA AZZURRA TERMOMETRO ORO
115	VE1170A	SUPPORTO D16 ELLITTICO NICHEL OPACO
116	VM1762A	SUPPORTO LAMPADA INTERNO
117	VE1535A	LED BIANCO 230V
118	VM1775A	TASTO ARGENTO OPACO NUVOLETTA ORO
119	VE1562A	PULSANTE UNIPOLARE NA
120	CR1000A	ATTACCO CERNIERA PORTA FORNO RIBALTA
121	VM1116A	TAPPO SX CRUSCOTTO COMANDI IN
122	VM1115A	TAPPO DX CRUSCOTTO COMANDI IN
123	MN1095A	GHIERA CON INDICE STAMPATO NECHELATA
180	VE1555A	INVERTITORE DI MARCIA
181	VE1110A	CONDENSATORE 6,3 µF 450VAC 50/60Hz
182	VE1095A	TELERUTTORE GE 25A 230V 50/60
183	EL1195A	RACCORDO A GOMITO CON J.GUEST
184	EL1085A	ELETTR.SING. ATT. J.GUEST INCORPORATO
185	VM1750A	MORSETTIERA A PETTINE
186	CE1130A	CAVO 5X1,5MMQ H07RN-F L=1,5M + MORS.K1/6
187	TR1136A	TERMOSTATO SIC. UNIP. 330°C
188	TM1000C	SUONERIA ELETTRONICA 15 SEC 230V

MOD:XF193-B

EN

Codes descriptions

1	VT1072A	LINE MISS ROSSELLA BLACK EXTERNAL GLASS
2	0H1930B	HANDLE TUBE L= 718 Ø18x1
3	MG1015B	L.MISS/L.MICRO/CHEFTOP HANDLE TERMINALS
4	0H1425B	L.M. ARIANNA-ROSE LEFT/RIGHT DOOR COLUMN
5	VM1051A	LOWER COVER FOR LEFT COLUMN OF
6	VM1050A	LOWER COVER FOR RIGHT COLUMN OF
7	VM1046B	LEFT UPPER LID FOR COLUMN FOR
8	VM1045B	RIGHT UPPER LID FOR COLUMN FOR
9	GN1265A	INTERNAL GLASS SEAL XVC054/104
10	VM1025A	NYLON LID PA66 V2 GREY Ø16
11	VT1070B	INTERNAL GLASS 715x415x6 BTFL
12	CR1050A	DOOR HINGE XVC104-LM ROSSELLA
40	GN1354A	LineMiss ROSSELLA DOOR GASKET - GN1110A
41	0G1125C	LineMiss ROSSELLA FAN GUARD
42	VN1025A	FAN D=196 H=61 38 BLADES STAINLESS
42	VN1025A	FAN D=196 H=61 38 BLADES STAINLESS
44	RS1090A	CIRC.HEAT. ELEMENT D=230 3 TURNS
45	GN1327A	HEATING ELEMENT GASKET 100X22X0.8
46	0H3020A	MOTOR SHAFT SEALING DISC
47	GN1140A	MOLDED MOTOR SUPPORT GASKET
48	VN1130A	330W 230V 50/60HZ MOTOR
49	0H3586A	ZINCATE MOTOR GUARD PLATE XBC-XVC
50	GRL1025A	RIGHT/LEFT LAT.GRID CHROMIUM-PLATED
50	GRL1025A	RIGHT/LEFT LAT.GRID CHROMIUM-PLATED
52	VM1815A	M6 LATERAL SUPPORTS FIXING BOLT
53	VE1015A	LAMP HOLDER SERIE 2 FOR HALOGEN LAMP
54	VE1005A	HALOGEN LAMP 33W ENERGY SAVER
55	GN1065A	SEAL FOR LAMP GLASS COVER (PURE
56	GN1055A	OR 46x2 VMQ 70 RED
57	VT1195A	BOROSILICATE LIGHT BULB GLASS COVER
58	0H4820A	BULB HOLDING BRACKET
59	0H1990A	EXTERNAL WATER PIPE + STAINLESS
60	RC1170A	STAINLESS STEEL NUT M14 H=8 CH=22
61	EL1055A	INTERMEDIATE REDUCTION FROM D=10 TO D=8
62	TB2034A	L.MISS WATER SYSTEM - TB1815A
100	0D1285E	LINE MISS ROSSELLA OUTER CASING
101	0H1450A	XB-XV-XG ST. STEEL MUFFLE FRONT CORNER
102	VE1295A	DOOR MICROSWITCH MK 16A 230V UL
103	0F1095C	LINE MISS ROSSELLA BACK PANEL
104	VM1950A	PLASTIC DRIP FLAP
105	VM1951A	IP CHIMNEY COVER
106	VM1952A	IP MOTOR COVER
107	PD1001A	FOOT 35X35 H26 GREY PLASTIC+RUBBER
108	PD1001A	FOOT 35X35 H26 GREY PLASTIC+RUBBER
109	0D1425C	
110	MN1090B	LINEMISS 0-60 MIN TIMER KNOB
111	MN1091B	80-260°C THERMOSTAT KNOB
112	TR1100A	269°C ADJUSTABLE THERMOSTAT 55.19052.80
113	TM1005A	TIMER MI2 60 MIN 250V 16A
114	VE1530A	BLUE LIGHT COVER GOLD THERMOMETER
115	VE1170A	OPAQUE NICKEL ELLIPTICAL SUPPORT D16
116	VM1762A	INNER LAMP SUPPORT
117	VE1535A	WHITE LED 230V
118	VM1775A	OPAQUE SILVER KEY WITH GOLD "CLOUD"
119	VE1562A	UNIPOLAR NA PUSH BUTTON
120	CR1000A	HINGE LATCH L.M.
121	VM1116A	LEFT PLASTIC LATERAL CAP FOR CONTROL
122	VM1115A	RIGHT PLASTIC LATERAL CAP FOR
123	MN1095A	DIAL WITH INDEX
180	VE1555A	REVERS.SWITCH MOTOR P19.5J.02.H6.17
181	VE1110A	CONDENSER 6,3 µF 450VAC 50/60Hz
182	VE1095A	REMOTE CONTROL SWITCH GE 25A 230V
183	EL1195A	ELBOW UNION WITH J.GUEST TERMINAL
184	EL1085A	WATER SINGLE ELECTROVALVE WITH
185	VM1750A	TERMINAL BOARD
186	CE1130A	CABLE 5x1,5MMQ H07RN-F L=1,5M
187	TR1136A	SAFETY THERMOSTAT UNIP. 330°C
188	TM1000C	ELECTRICAL BUZZER 15 SECS 230 V