COLOR VARIATION PARTS

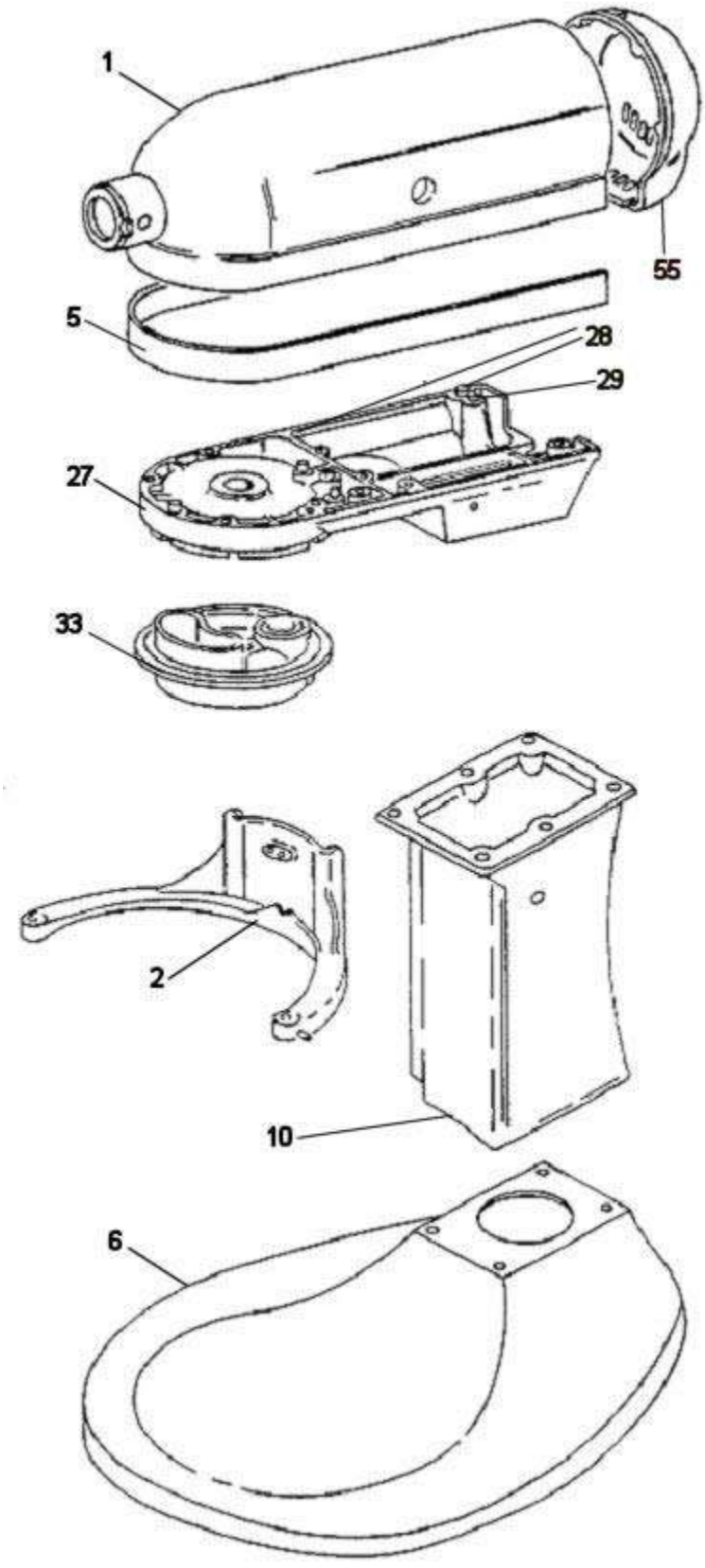

COLOR VARIATION PARTS

Pos	Partnr	OldPartnr	NLA	Description	Qty	SPQ
1	240291-1	4162086		MOTOR HOUSING - WHITE	1	1
1	240291-14	4176176		MOTOR HOUSING - WHITE FOR 5KPM50B	1	1
1	240291-20	4176316		MOTOR HOUSING - MAJESTIC YELLOW	1	1
1	240291-21	4176315		MOTOR HOUSING - EMPIRE RED	1	1
1	240291-23	4176086		MOTOR HOUSING - IMPERIAL GRAY	1	1
1	240291-7	4169509		MOTOR HOUSING - COBALT BLUE	1	1
2	3179300	4162015		BOWL SUPPORT & PIN ASSY - WHITE	1	1
2	3179303	4169505		BOWL SUPPORT & PIN ASSY - COBALT BLUE	1	1
2	3179304	4176092		BOWL SUPPORT & PIN ASSY - IMPERIAL GREY	1	1
2	3179318			BOWL SUPPORT & PIN ASSY - EMPIRE RED	1	1
2	3179319			BOWL SUPPORT & PIN ASSY - MAJESTIC YELLOW	1	1
5	9704633			TRIM BAND - 5K5SSWH, 5KPM50EWH, 5KPM50EGR, 5KPM50BWH	1	1
5	9704646			TRIM BAND - 5KPM50F	1	1
5	9705172			TRIM BAND - UK/EUROPE, 5KSM5	1	1
5	9705186		x	TRIM BAND - AUSTRALIA	1	1
5	9706975			TRIM BAND - 5KPM5BWH - EWH	1	1
5	9706977			TRIM BAND - 5KPM50WH - EGR- EWH - BWH	1	1
6	240493-2	4162202		BASE W/FOOT SUPPPORT - WHITE	1	1
6	240493-7	4169511		BASE W/FOOT SUPPPORT - COBALT BLUE	1	1
6	240493-8	4176090		BASE W/FOOT SUPPPORT - IMPERIAL GREY	1	1
6	9702408	3179299		BASE W/FOOT SUPPPORT - EMPIRE RED	1	1
6	9702409	9704505		BASE W/FOOT SUPPPORT - MAJ. YELLOW	1	1
10	240148-10	4176091		COLUMN - IMPERIAL GREY	1	1
10	240148-4	4162411		COLUMN - WHITE	1	1
10	240148-8	4176001		COLUMN - COBALT BLUE	1	1
10	9701109			COLUMN - WHITE (column only 5KPM5F & 5KPM50F)	1	1
10	9702393			COLUMN - EMPIRE RED	1	1
10	9702394			COLUMN - MAJESTIC YELLOW	1	1
27	240354-26	4176000		LOWER GEAR CASE - COBALT BLUE	1	1
27	240354-3	4162129		LOWER GEAR CASE - WHITE K5	1	1
27	9701512			LOWER GEAR CASE - WHITE 5KPM50	1	1
27	9702210	4176088		LOWER GEAR CASE - IMPERIAL GRAY	1	1
27	9704499	9704500		LOWER GEAR CASE - EMPIRE RED	1	1
27	9704501	9704502		LOWER GEAR CASE - MAJESTIC YELLOW	1	1
28	3180499			DOWELL PIN	1	1
29	3180497			DOWELL PIN	1	1
33	240286-1	4162075		PLANETARY - WHITE	1	1
33	240286-10	4169508		PLANETARY - COBALT BLUE	1	1
33	240286-11	4176089		PLANETARY - IMPERIAL GRAY	1	1
33	240286-22	4176322		PLANETARY - MAJESTIC YELLOW	1	1
33	240286-23	4176321		PLANETARY - EMPIRE RED	1	1
55	240253-1	4162055		END COVER - WHITE	1	1

Pos	Partnr	OldPartnr	NLA	Description	Qty	SPQ
55	240253-21	4176319		END COVER - MAJESTIC YELLOW	1	1
55	240253-22	4176318		END COVER - EMPIRE RED	1	1
55	240253-8	4169506		END COVER - COBALT BLUE	1	1
55	3179869			END COVER - WHITE 5KPM50	1	1
55	9702213			END COVER - IMPERIAL GRAY	1	1

Base and Pedestal Unit

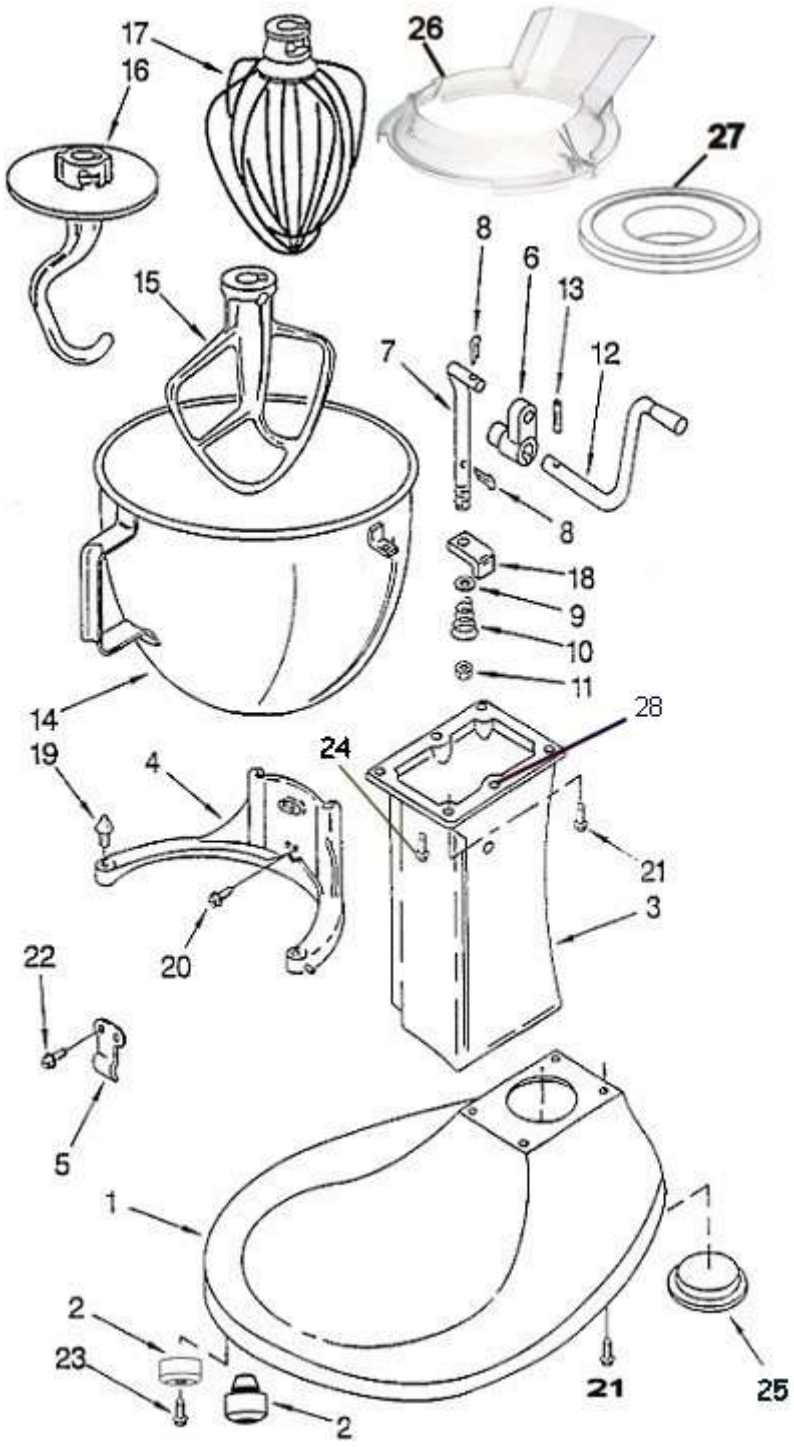

K5 - 2

Base and Pedestal Unit

Pos	Partnr	OldPartnr	NLA	Description	Qty	SPQ
1	ViewColorParts				1	
2	240211	4162038		OLD STYLE FOOT	1	1
2	9703414			NEW RUBBER FOOT NO SCREW	1	5
3	ViewColorParts				1	
4	ViewColorParts				1	
5	3182857	4176228		LATCH, BOWL SPRING	1	2
5	3182857	4159618		LATCH, BOWL SPRING	1	2
6	241764	4162874		ARM, BOWL LIFT	1	5
7	9085	4159620		ROD, BOWL LIFT	1	1
8	9704608	4159126		COTTER PIN	1	1
8	9704608	90222		COTTER PIN	1	1
9	WS00323	4159514		WASHER	1	5
10	9237	4159622		SPRING, LIFT ROD	1	1
11	NS03123	4159092		NUT, 1/4-28	1	1
12	9079	4159615		HANDLE, BOWL LIFT	1	1
13	9703442	4176048		ROLL PIN	1	1
14	K5ASB	4162161		5 QT BOWL "Order by Sales"	1	1
14	K5ASB	240340		5 QT BOWL "Order by Sales"	1	1
14	K5ASB	4176144		5 QT BOWL "Order by Sales"	1	1
15	9707670			COATED BEATER -- AUG. 2003	1	1
15	K5AB	240235-1		BEATER "Order by Sales"	1	1
15	K5AB	4162164		BEATER "Order by Sales"	1	1
16	K5ADH	4176181		DOUGH HOOK "Order by Sales"	1	1
16	K5ADH	9708033		DOUGH HOOK "Order by Sales"	1	1
16	K5ADH	9707672		DOUGH HOOK "Order by Sales"	1	1
16	K5ADH	9701853		DOUGH HOOK "Order by Sales"	1	1
16	K5ADH	4162153		DOUGH HOOK "Order by Sales"	1	1
16	K5ADH	3183232		DOUGH HOOK "Order by Sales"	1	1
17	K5AWW	9704309		WIRE WHIP "Order by Sales"	1	1
17	K5AWW	4176306		WIRE WHIP "Order by Sales"	1	1
18	240169	4162022		BOWL LIFT BRACKET	1	1
19	240185	4162028		BOWL LOC. PIN	1	1
20	3400018	4159214		SCREW 10-24 X 1/2	1	2
21	240912	4162403		PAN HD SCREW	1	1
22	3400024	4159193		SCREW	1	2
23	SD00843	4159349		SCREW FOR OLD STYLE FOOT	1	1
24	3182904			SCREW, DBL ENDED	1	1
25	243352	4176184		PLUG	1	1
26	3177975				1	
26	K5APSC			POURING SHIELD FOR KSM5 - KPM50 - K5SS With Microswitch "Order by Sales"	1	1

Pos	Partnr	OldPartnr	NLA	Description	Qty	SPQ
26	KPS2CL	4176453		POURING SHIELD FOR 5K45 - 5KSM90 - 150 K5 Without Microswitch "Order by sales"	1	1
26	KPS2CL	3177975		POURING SHIELD FOR 5K45 - 5KSM90 - 150 K5 Without Microswitch "Order by sales"	1	1
26	KPS2CL	4176452		POURING SHIELD FOR 5K45 - 5KSM90 - 150 K5 Without Microswitch "Order by sales"	1	1
26	KPS2CL	9706633		POURING SHIELD FOR 5K45 - 5KSM90 - 150 K5 Without Microswitch "Order by sales"	1	1
27	K5BC5N			PLASTIC BOWL LID "Order by Sales"	2	2
27	KBC90N	242841-2		PLASTIC BOWL LID "Order by Sales"	1	1
28	3180500			DOWELL PIN	1	1

CASE, GEARING AND PLANETARY UNIT

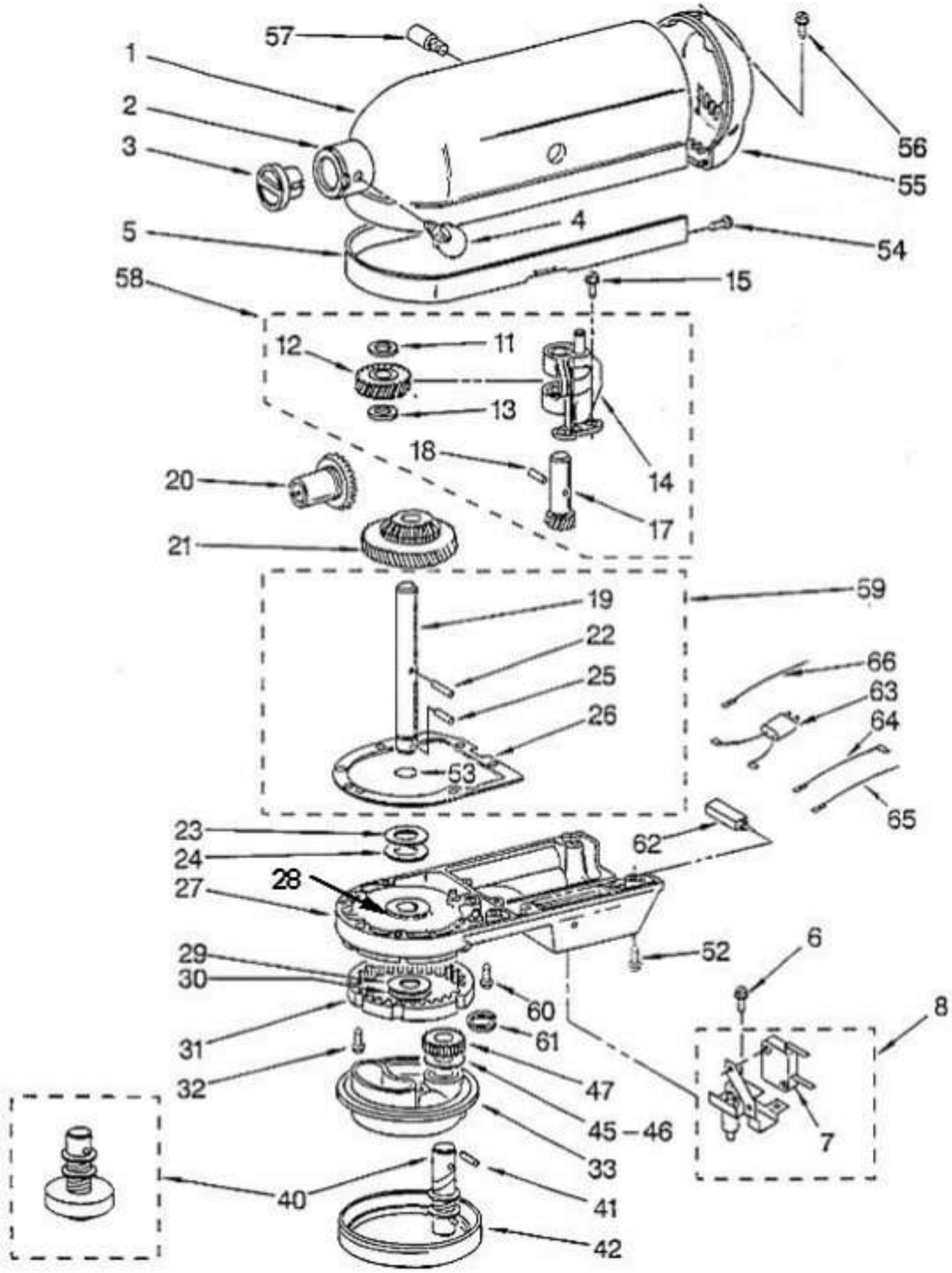

CASE, GEARING AND PLANETARY UNIT

Pos	Partnr	OldPartnr	NLA	Description	Qty	SPQ
1	ViewColorParts				1	
2	4159709			ATTACHMENT HUB RING ONLY KSM90-K5	1	1
3	242765-2	4163469		CAP, ATTACHMENT HUB CHROME	1	1
3	242765-4	4176209		CAP, ATTACHMENT HUB WHITE	1	1
4	240374	4162142		THUMB SCREW, BLACK	1	5
4	240374-2	4176211		THUMB SCREW, WHITE (STORM GRAY)	1	1
5	ViewColorParts				1	
6	965173	246132		SCREW	1	1
7	9701129			MICROSWITCH	1	1
8	9701014			ASSY- BOWL ACTUATOR	1	1
11	3180161	4159530		WASHER, FIBER BLACK, RAY(1 BAG=10 GREY WASHERS)	1	1
11	3180161	4159529		WASHER, FIBER BLACK, RAY(1 BAG=10 GREY WASHERS)	1	1
12	241803	4162897		WORM GEAR 23T	1	5
13	3180161	4159529		WASHER, FIBER BLACK, RAY(1 BAG=10 GREY WASHERS)	1	1
13	3180161	4159530		WASHER, FIBER BLACK, RAY(1 BAG=10 GREY WASHERS)	1	1
14	240308	4162099		WORM GEAR BRKT & BEARING	1	1
15	3400022	680363		SCREW & L.W. ASSY. 10-24 X 7/16 PHIL HD	1	1
17	240210-2	4162037		SHAFT AND PINION 10T	1	1
18	9705444	309565		PIN, VERTICAL CENTER SHAFT	1	5
19	240026	4161956		SHAFT, VERTICAL CENTER	1	1
20	9703907			GEAR, ATTACH. HUB BEVEL 23T	1	1
21	9703905			BEVEL PINION 19T & CENTER GEAR 62T	1	1
22	240018-1	4161950		PIN, VERTICAL CENTER SHAFT	1	2
23	3180163			WASHER FIBER LOWER GEAR CASE(1 BAG=10 GREY+10BLACKWASHERS)	1	1
24	3180163			WASHER FIBER LOWER GEAR CASE(1 BAG=10 GREY+10BLACKWASHERS)	1	1
25	9705443	4159133		GROOVE PIN, TYPE E 5/32 X 7/16	1	2
26	240684	4162324		GASKET, TRANSMISSION CASE	1	2
27	ViewColorParts				1	
28	16897			Lower bearing	1	1
29	3180163			WASHER FIBER LOWER GEAR CASE(1 BAG=10 GREY+10BLACKWASHERS)	1	1
30	3180163			WASHER FIBER LOWER GEAR CASE(1 BAG=10 GREY+10BLACKWASHERS)	1	1
31	9703904	4161402		GEAR, INTERNAL 59T	1	1
32	103994	4160595		SCREW, SPECIAL	1	1
33	ViewColorParts				1	

Pos	Partnr	OldPartnr	NLA	Description	Qty	SPQ
40	3184052	4176067		AGITATOR SHAFT (incl,Shaft,Ret Ring,Spring,Cup and Pin)	1	1
41	9704677		x	GROOVE PIN, TYPE E 5/32 X 7/16	1	1
42	240285	4162074		PLANETARY DRIP RING	1	1
45	3180160			WASHER, SHIM .015" TCK .031" THK-PLANETARY(1 BAG=10CHROME WASHERS)	1	1
46	3180160			WASHER, SHIM .015" TCK .031" THK-PLANETARY(1 BAG=10CHROME WASHERS)	1	1
47	9703903	4161401		PINION GEAR, 18T AGITATOR SHAFT	1	1
51	3400026	4159206		Machine Screw 10-24 x 1 3/4 Fil,Hd	1	1
52	3400025	4159204		MACHINE SCREW, 10-24 X 1 PHIL HEAD	1	1
53	67500-55	4159817		O-RING	1	2
54	311932	4159430		SCREW, SELF TAPPING - TRIM BAND	1	1
55	ViewColorParts				1	
56	241877	4162914		SCREW, 6-32 X 3/8 PHIL OVAL HD	1	2
57	243342	4176183		PIN GUARD	1	1
58	240309-2	4162101		Worm Gear Bracket and Gear (10 & 23 T) Assembly	1	1
59	4160474			CENTER SHAFT & "O" RING (ILLUS 19,22,25,26,53)	1	1
60	3400026	4159206		Machine Screw 10-24 x 1 3/4 Fil,Hd	1	1
61	9703438			RING, PLANETARY RETAINING	1	1
62	241287-1	4176099		Protector ETA 41-06-P30 AC250V 3A/CIRCUIT BREAKER	1	1
62	9701663			RESET BUTTON W/HEX NUT - ONLY 5KPM50	1	1
62	WL1904			WASHER, LOCK TOOTH - ONLY 5KPM50	1	1
63	9705132	3179959		RFI FILTER(at back of unit near end cover)	1	1
63	9705132	4176340		RFI FILTER(at back of unit near end cover)	1	1
64	9702309	4176247		LEAD FOR CIRCUIT BREAKER	1	1
65	9704827	4176248		LEAD FOR CIRCUIT BREAKER TO CONTROL BOARD	1	1
66	9701776			Lead, Circuit Board to Filter	1	1

Motor and Control Parts

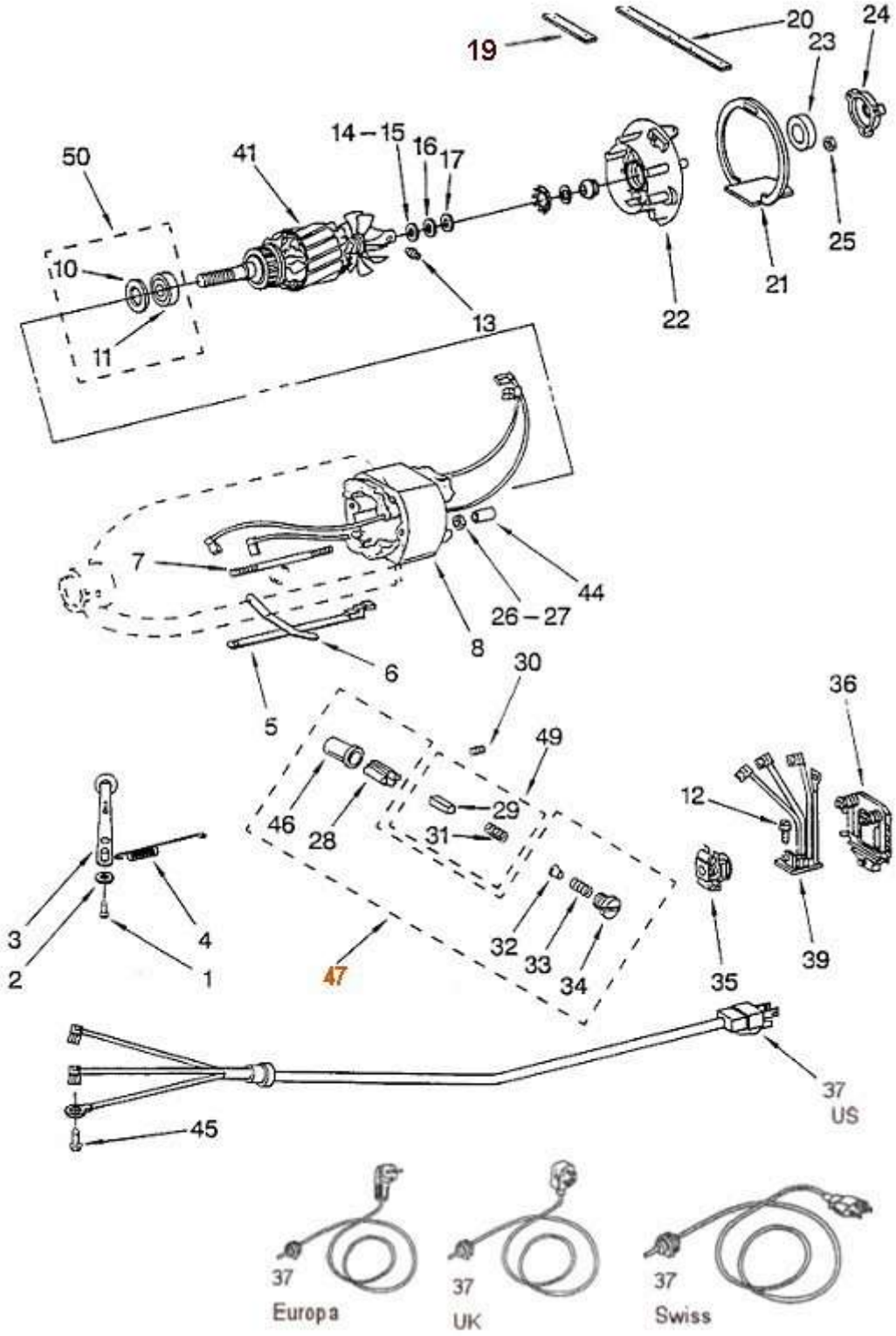

Motor and Control Parts

Pos	Partnr	OldPartnr	NLA	Description	Qty	SPQ
1	110679	4160965		PIVOT SCREW	1	1
2	116241	4161697		WASHER, SPRING	1	5
3	3184193			SWITCH LEVER & STUD, BLACK	1	5
3	3184194	4176212		SWITCH LEVER & STUD, GRAY	1	1
3	4176230	4162607		Control spring/speed level, black for old K5/K45	1	1
4	3183680	4160596		SPRING, CONROL PLATE	1	1
5	3184176	4176243		SPEED LINK & CAM	1	1
6	240205	4162035		SPRING FLAT	1	1
7	240769	4162344		STATOR SCREW	1	1
8	9701670	4169539		FIELD ASSY, 230 V	1	1
10	9704324	4162428		WASHER, BALL BEARING FRONT	1	1
11	4159001			BALL BEARING	1	1
12	3400402	4159438		SCREW, SELF TAPPING 4-40 X 5/16 PHIL PAN HD, TYPE TT	1	1
13	16998	4159662		STUD, GOVERNOR DRIVE	1	2
14	3180162			WASHER, SPACING MOTOR BEARING BRACKET(1BAG=10GREY+10RED+10BLACK)	1	1
15	3400900			LOCK WASHER	1	1
16	3180162			WASHER, SPACING MOTOR BEARING BRACKET(1BAG=10GREY+10RED+10BLACK)	1	1
17	4159522			NOT AVAILABLE SEPARATEDLY INCL IN # 22	1	1
19	9701584			Seal 1,37 x 0,47 x 0,94 cm only 5KPM5 & 5KPM50	1	1
20	9701104	9701501		Seal 21,25 x 0,62 x 0,77 cm only 5KPM5 & 5KPM50	1	1
21	3184356	4162351		END SEAL Does not incl #20	1	2
21	9701501	4162350		END SEAL 5KPM MODELS Does not incl #20	1	1
22	3180526			BEARING	1	1
22	9701583			BRACKET BEARING 5KPM MODELS	1	1
23	3180238			FEL WASHER (CAN NOT BE SERVICED ANYMORE) incl in #22 3180526	1	1
24	3180526			BEARING	1	1
25	NS00922	4159074		NUT, MACHINE HEX (10-24)	2	2
26	NS00922	4159074		NUT, MACHINE HEX (10-24)	1	2
27	4159494			LOCK WASHER #10 EXT. SHAKEPROOF	1	1
28	240680	4162320		INSERT, BRUSH HOLDER	1	1
30	3400019	90188		SET SCREW, 10-24 X 1/4 HDLS. CUP PT	1	1
30	3400019	4159262		SET SCREW, 10-24 X 1/4 HDLS. CUP PT	1	1
31	4162424		x	SPRING BRUSH OBSOLETE	1	1
32	116286	4161745		CAP, SPRING SEAT	1	1
33	116287	4161746		SPRING, CAP	1	1
34	3184211			CAP, BRUSH HOLDER, WHITE	2	2
34	3184212			CAP, BRUSH HOLDER, BLACK	2	10
35	17830	4159675		GOVERNOR ASSY	1	1
36	240904-2	4176137		CONTROL PLATE ASSY	1	1
36	240904-2	4162402		CONTROL PLATE ASSY	1	1
37	9702313			POWER CORD - "TUV" 5KPM50E WHITE	1	1

Pos	Partnr	OldPartnr	NLA	Description	Qty	SPQ
37	9702314	9701386		POWER CORD - BRITISH WHITE	1	1
37	9702315	9701387		POWER CORD - BRITISH BLACK	1	1
37	9702318	3184199		POWER CORD - "E" Models White (SHUKO)	1	1
37	9702319			POWER CORD - "E" Models Black (SHUKO)	1	1
37	9703280			POWER CORD - 5KPM50B (BLACK)	1	1
39	9706596	9701269		PHASE CONTROL BOARD 230 Volt	1	1
41	241991-4	4162960		ARMATURE 230V AND BEARING ASSY(INCLUDES #11,USE WITH # 8)	1	1
41	9701669			ARMATURE 230V AND BEARING ASSY(USE WITH # 8)	1	1
44	241356			SLEEVE, MOTOR STUD	1	1
45	3184609	4162634		SCREW, SELF TAPPING 10-32, PHIL PAN HD TYPE TT	1	2
46	3179908			HOUSING BRUSH HOLDER	1	1
47	4162546			Brush Holder(Incl,ilust,28,32,33,34&46)	2	1
49	9706416	3184115		CARBON BRUSH & SPRING	2	10
50	4176025			Ball Bearing ands Washer	1	1