MOD:XFT195

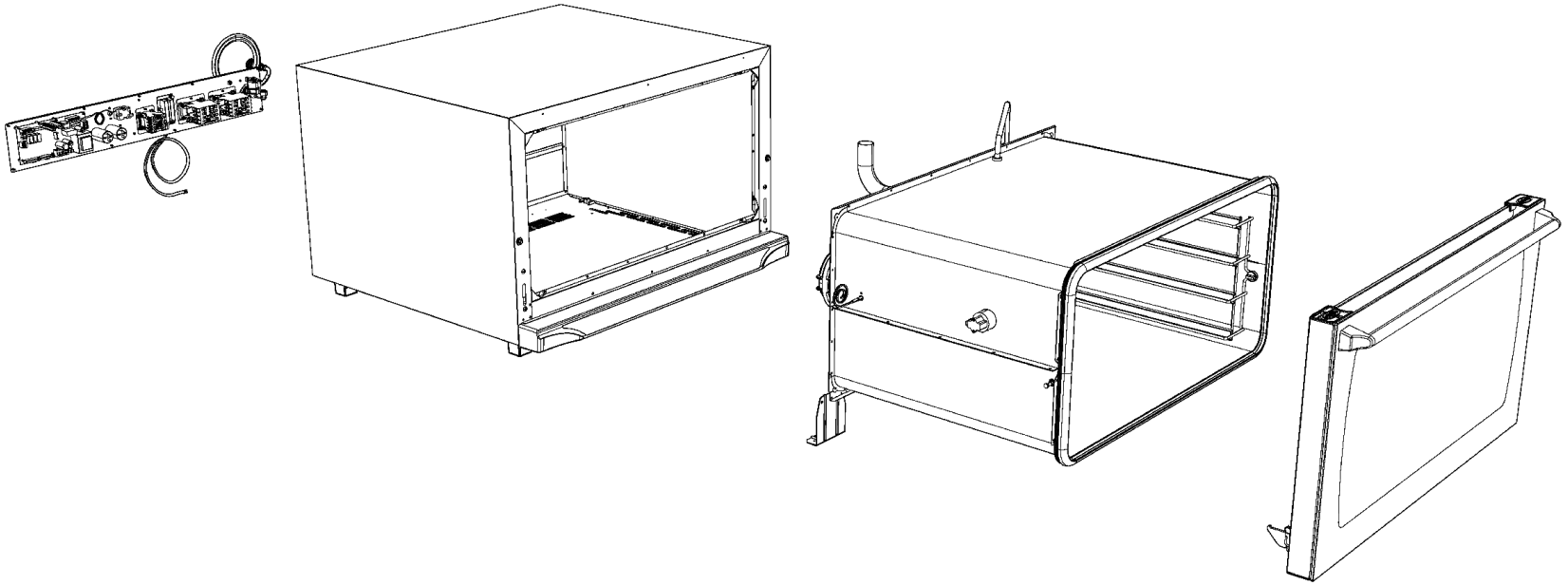

MOD:XFT195

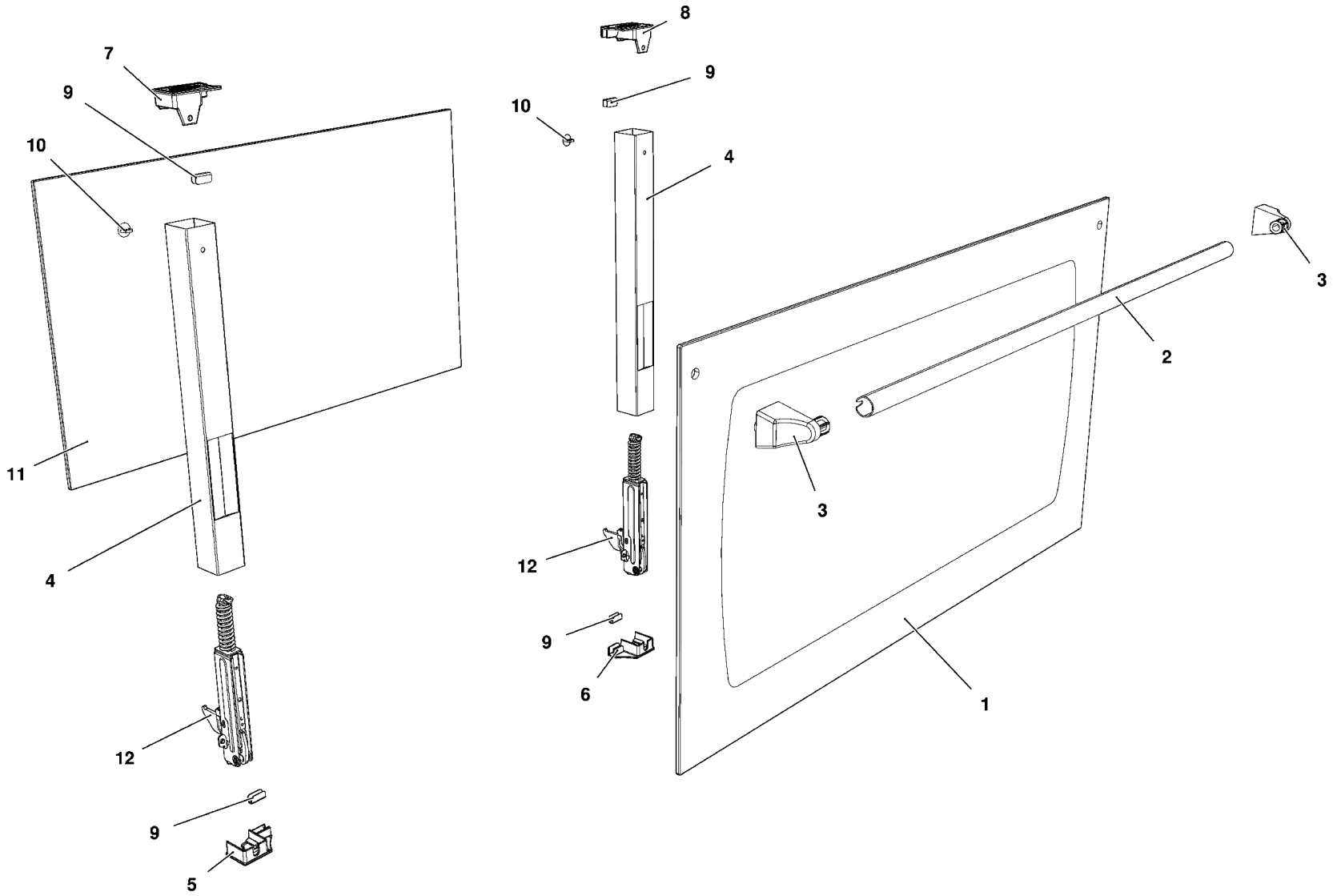

MOD:XFT195

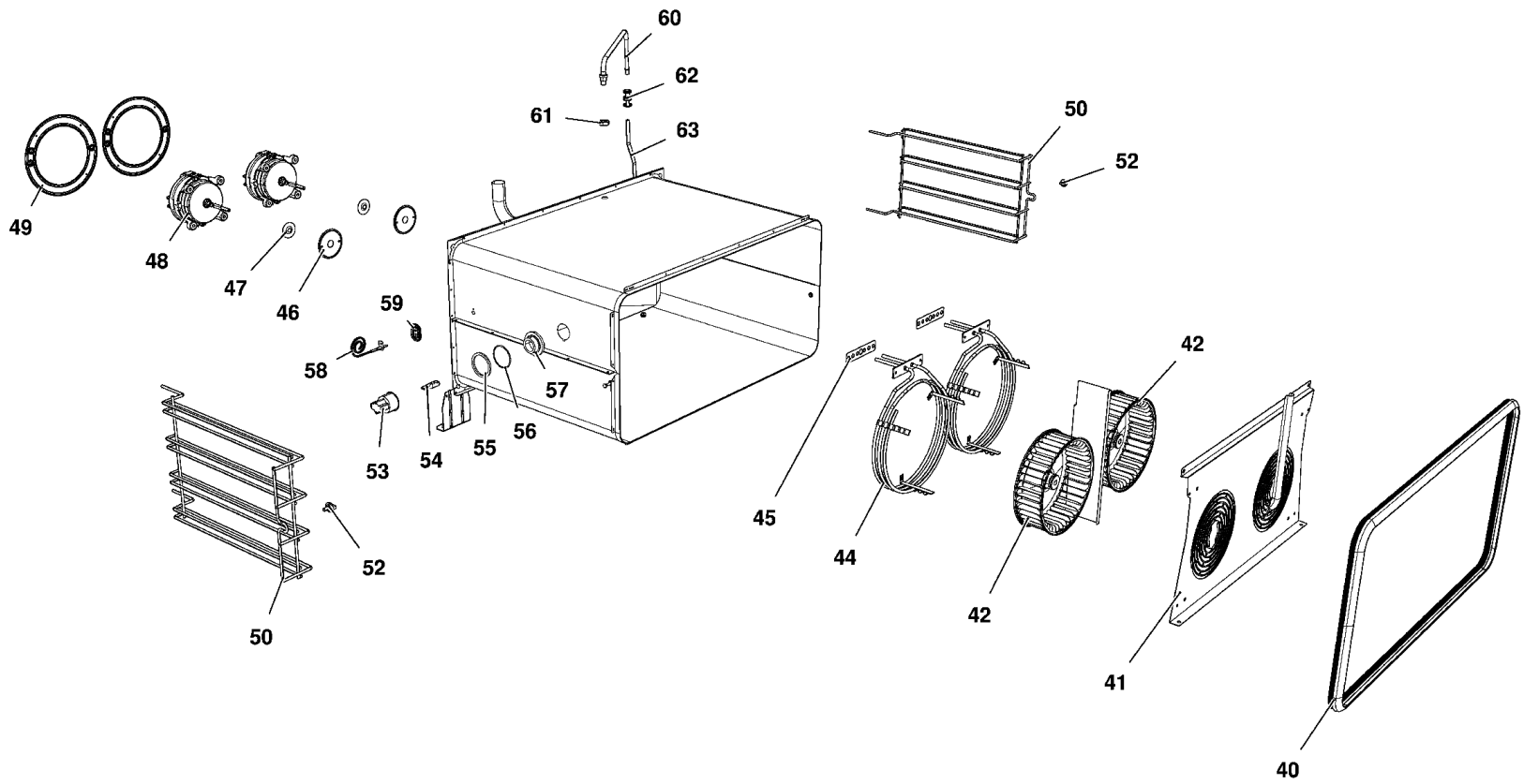
60
62
61
63
50
52
49
48
47
46
59
58
57
56
55
54
53
52
50
45
44
42
42
41
40

MOD:XFT195

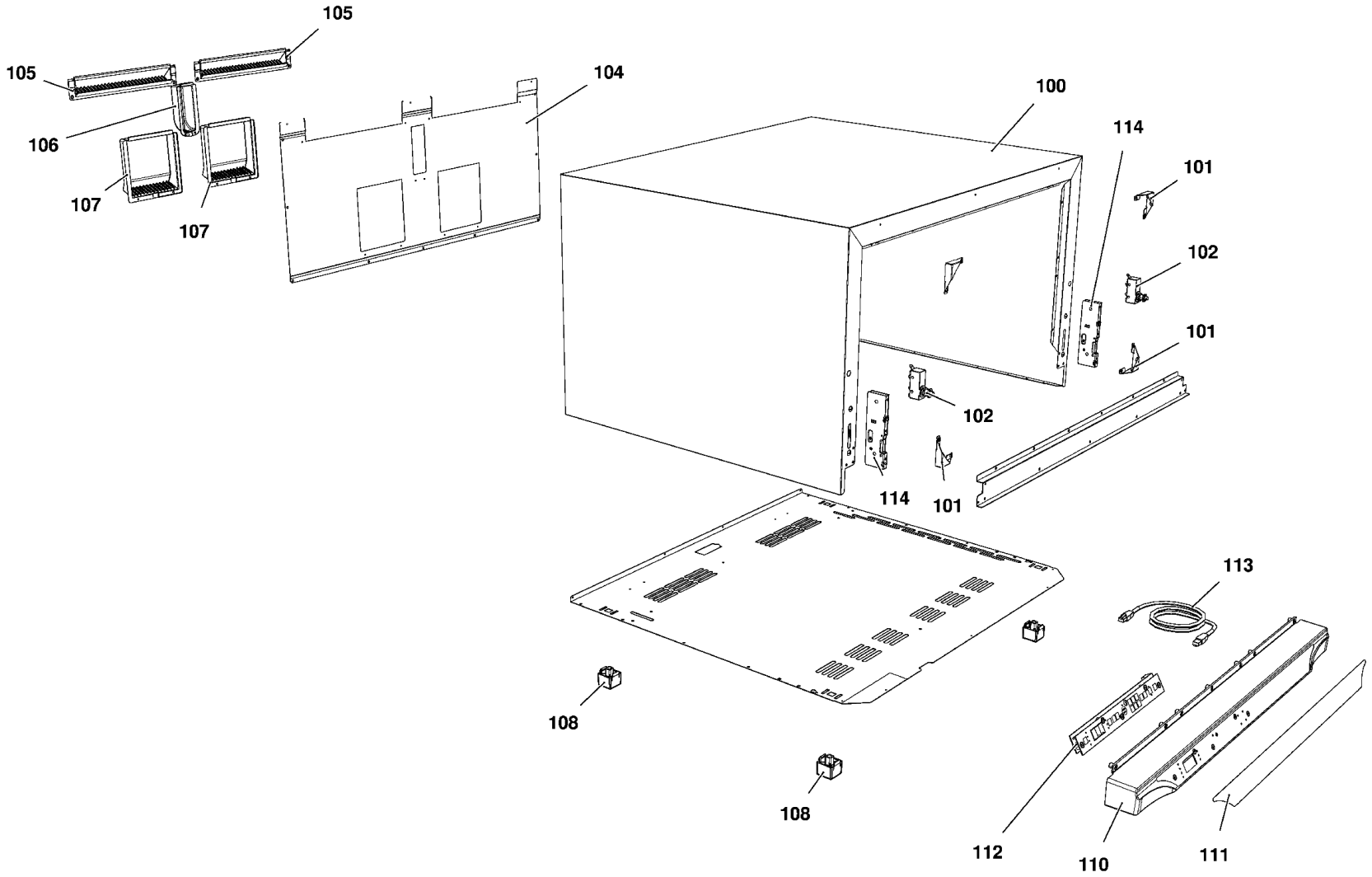
105
105
104
100
106
114
101
107
107
102
101
102
114
101
113
108
108
112
110
111

MOD:XFT195

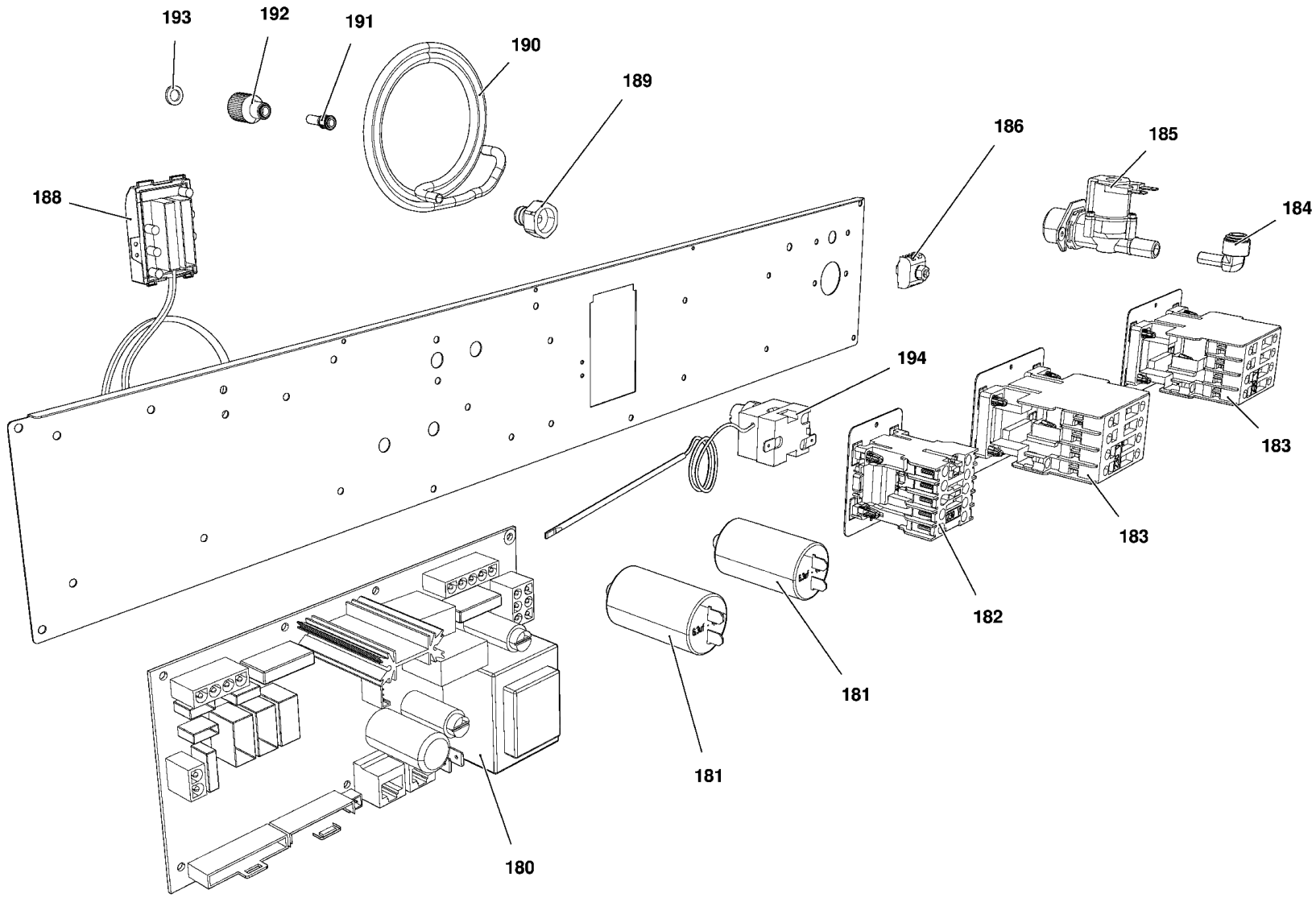

MOD:XFT195

IT

Descrizione codici

1	VT1072A	VETRO EST. 798X424 NERO XF190/193/195
2	0H1930B	TUBO MANIGLIA L= 718 Ø18X1
3	MG1015B	TERMINALE MANIGLIA L.MISS/L.MICRO/CHEFTO
4	0H1425B	COLONNINA SX/DX L.M. ARIA-ROSSEL 40X40X1
5	VM1051A	TAPPO INF. SX COLONNINA PORTA
6	VM1050A	TAPPO INF. DX COLONNINA PORTA
7	VM1046B	TAPPO SUP. SX COLONNINA PORTA
8	VM1045B	TAPPO SUP. DX COLONNINA PORTA
9	GN1265A	GUARNIZIONE VETRO INTERNO XVC054/104
10	VM1025A	TAPPO NYLON PA66 V2 GRIGIO Ø16
11	VT1070B	VETRO INTERNO 715X415X6 BETFL
12	CR1050A	CERNIERA PORTA FORNO RIBALTA XVC104-LM
40	GN1354A	GN1110A-GUARNIZIONE PORTA LM ROSSELLA
41	0G1125C	CARTER ARIA LM ROSSELLA
42	VN1025A	VENTOLA D=196 H=61 38 PALE INOX DADO M8
42	VN1025A	VENTOLA D=196 H=61 38 PALE INOX DADO M8
44	RS1090A	RESISTENZA CIRCOLARE D=230 3 SPIRE
45	GN1327A	GUARNIZIONE RES. 100X22
46	0H3020A	DISCO TENUTA ALBERO MOTORE
47	GN1140A	GUARNIZIONE PORTAMOTORE STAMP.
48	VN1130A	MOTORE FORNO 330W 230V 50/60HZ
49	0H3586A	LAMIERA PROTEZIONE MOTORE ZINCATO
50	GRL1025A	GRIGLIA LATERALE DX/SX CROMATA
50	GRL1025A	GRIGLIA LATERALE DX/SX CROMATA
52	VM1815A	NOTTOLINO M6 CROMATO FISS. GRIGLIE
53	VE1015A	PORTA LAMPADA SERIE 2 PER LAMPADA
54	VE1005A	LAMPADA HALOPIN 25W
55	GN1065A	GUARNIZIONE PORTALAMPADA DE=53.2
56	GN1055A	OR 46X2 VMQ 70 ROSSO
57	VT1195A	VETRO COPRILAMPADA BOROSILICATO TEMPRATO
58	TR1105A	SONDA TEMPERATURA PT100 L1000
59	VM2052A	COPERCHIO SONDA TEMPERATURA LM
60	0H1990A	TUBO EST. UMIDITA' + RC1165A0
61	RC1170A	DADO M14 H=8 CH=22 INOX
62	EL1055A	RIDUZIONE INTERMEDIA D10-D8
63	TB2034A	TB1815A-IMPIANTO IDRICO FORNI LMS
100	0D1285F	MANTELLO LM ROSSELLA
101	0H1450A	ANGOLO FACCIATA MUFFOLA INOX XB-XV-XG
102	VE1295A	MICROINTERRUTTORE PORTA MK 16A 230V UL
102	VE1295A	MICROINTERRUTTORE PORTA MK 16A 230V UL
104	0F1095C	SCHIENA LM ROSSELLA
105	VM1950A	GRONDAIA PLASTICA
106	VM1951A	CUFFIA COPRICAMINO IP
107	VM1952A	COPRIMOTORE IP
108	PD1001A	PIEDINO 35X35 H26 PLASTICA+GOMMA GRIGIO
108	PD1001A	PIEDINO 35X35 H26 PLASTICA+GOMMA GRIGIO
110	VM2017A	CRUSCOTTO COMANDI DYNAMIC LMISS800
111	MS1013A	MASCHERINA SERIGRAFATA DYNAMIC LM800 TOU
112	PE1980A	ASM SCHEDA CONTROLLO LMISS DYNAMIC
113	CE1012A	CAVO DI RETE RJ45 L1MT
114	CR1000A	ATTACCO CERNIERA PORTA FORNO RIBALTA
180	PE1983A	SCHEDA POTENZA 230V LMISS DYNAMIC
181	VE1110A	CONDENSATORE 6,3 ?F 450VAC 50/60HZ
182	VE1115A	MINICONTATTORE QUADRIPOLARE 20 A 230 V
183	VE1095A	TELERUTTORE GE 25A 230V 50/60
184	EL1195A	RACCORDO A GOMITO CON J.GUEST
185	EL1085A	ELETTR.SING. ATT. J.GUEST INCORPORATO
186	VM1750A	MORSETTIERA A PETTINE
188	CE1130A	CAVO 5X1,5MMQ H07RN-F L=1,5M + MORS.K1/6
189	RC1030A	RACCORDO DIRITTO D=8 - 3/4 FEMMINA JOHN
190	TB1079A	TUBO D8 ALLACCIAMENTO RETE LMISS
191	RC1002A	RACCORDO RIDUZIONE CODOLO 10M-8F
192	RC1365A	RACCORDO JG FEMMINA 3/4"-10
193	GN1200A	GUARNIZIONE D=24 RACCORDO 3/4 GOMMA
194	TR1136A	TERMOSTATO SIC. UNIP. 330°C

MOD:XFT195

EN

Codes descriptions

1	VT1072A	LINE MISS ROSSELLA BLACK EXTERNAL GLASS
2	0H1930B	HANDLE TUBE L= 718 Ø18X1
3	MG1015B	L.MISS/L.MICRO/CHEFTOP HANDLE TERMINALS
4	0H1425B	L.M. ARIANNA-ROSE LEFT/RIGHT DOOR COLUMN
5	VM1051A	LOWER COVER FOR LEFT COLUMN OF
6	VM1050A	LOWER COVER FOR RIGHT COLUMN OF
7	VM1046B	LEFT UPPER LID FOR COLUMN FOR
8	VM1045B	RIGHT UPPER LID FOR COLUMN FOR
9	GN1265A	INTERNAL GLASS SEAL XVC054/104
10	VM1025A	NYLON LID PA66 V2 GREY Ø16
11	VT1070B	INTERNAL GLASS 715X415X6 BTFL
12	CR1050A	DOOR HINGE XVC104-LM ROSSELLA
40	GN1354A	LINEMISS ROSSELLA DOOR GASKET - GN1110A
41	0G1125C	LINEMISS ROSSELLA FAN GUARD
42	VN1025A	FAN D=196 H=61 38 BLADES STAINLESS
42	VN1025A	FAN D=196 H=61 38 BLADES STAINLESS
44	RS1090A	CIRC.HEAT. ELEMENT D=230 3 TURNS
45	GN1327A	HEATING ELEMENT GASKET 100X22X0.8
46	0H3020A	MOTOR SHAFT SEALING DISC
47	GN1140A	MOLDED MOTOR SUPPORT GASKET
48	VN1130A	330W 230V 50/60HZ MOTOR
49	0H3586A	ZINCATE MOTOR GUARD PLATE XBC-XVC
50	GRL1025A	RIGHT/LEFT LAT.GRID CHROMIUM-PLATED
50	GRL1025A	RIGHT/LEFT LAT.GRID CHROMIUM-PLATED
52	VM1815A	M6 LATERAL SUPPORTS FIXING BOLT
53	VE1015A	LAMP HOLDER SERIE 2 FOR HALOGEN LAMP
54	VE1005A	HALOGEN LAMP 33W ENERGY SAVER
55	GN1065A	SEAL FOR LAMP GLASS COVER (PURE
56	GN1055A	OR 46X2 VMQ 70 RED
57	VT1195A	BOROSILICATE LIGHT BULB GLASS COVER
58	TR1105A	TEMPERATURE PROBE PT100 L1000
59	VM2052A	LINEMISS TEMPERATURE PROBE COVER
60	0H1990A	EXTERNAL WATER PIPE + STAINLESS
61	RC1170A	STAINLESS STEEL NUT M14 H=8 CH=22
62	EL1055A	INTERMEDIATE REDUCTION FROM D=10 TO D=8
63	TB2034A	L.MISS WATER SYSTEM - TB1815A
100	0D1285F	LINEMISS ROSSELLA EXTERNAL CHASING
101	0H1450A	XB-XV-XG ST. STEEL MUFFLE FRONT CORNER
102	VE1295A	DOOR MICROSWITCH MK 16A 230V UL
102	VE1295A	DOOR MICROSWITCH MK 16A 230V UL
104	0F1095C	LINE MISS ROSSELLA BACK PANEL
105	VM1950A	PLASTIC DRIP FLAP
106	VM1951A	IP CHIMNEY COVER
107	VM1952A	IP MOTOR COVER
108	PD1001A	FOOT 35X35 H26 GREY PLASTIC+RUBBER
108	PD1001A	FOOT 35X35 H26 GREY PLASTIC+RUBBER
110	VM2017A	600X400 LINEMISS DYNAMIC CONTROL BOARD
111	MS1013A	L.MISS TOUCH DYN. CONTROL BOARD STICKER
112	PE1980A	LINEMISS DYNAMIC CONTROL BOARD
113	CE1012A	RJ45 CABLE L= 1 MT
114	CR1000A	HINGE LATCH L.M.
180	PE1983A	LINEMISS DYNAMIC POWER CARD
181	VE1110A	CONDENSER 6,3 ?F 450VAC 50/60HZ
182	VE1115A	MINICONTACTOR WITH 4 POLES 20 A 230 V
183	VE1095A	REMOTE CONTROL SWITCH GE 25A 230V
184	EL1195A	ELBOW UNION WITH J.GUEST TERMINAL
185	EL1085A	WATER SINGLE ELECTROVALVE WITH
186	VM1750A	TERMINAL BOARD
188	CE1130A	CABLE 5X1,5MMQ H07RN-F L=1,5M
189	RC1030A	STRAIGHT JOINT D=8-3/4 FEMALE JOHN
190	TB1079A	L.MISS D8 WATER PIPE
191	RC1002A	10M-8F J.G. TERMINAL REDUCTION FITTING
192	RC1365A	3/4"-10 JG FEMALE CONNECTION
193	GN1200A	3/4 CONNECTION SEAL D=24 RUBBER+NET
194	TR1136A	SAFETY THERMOSTAT UNIP. 330°C