MOD:XFT193

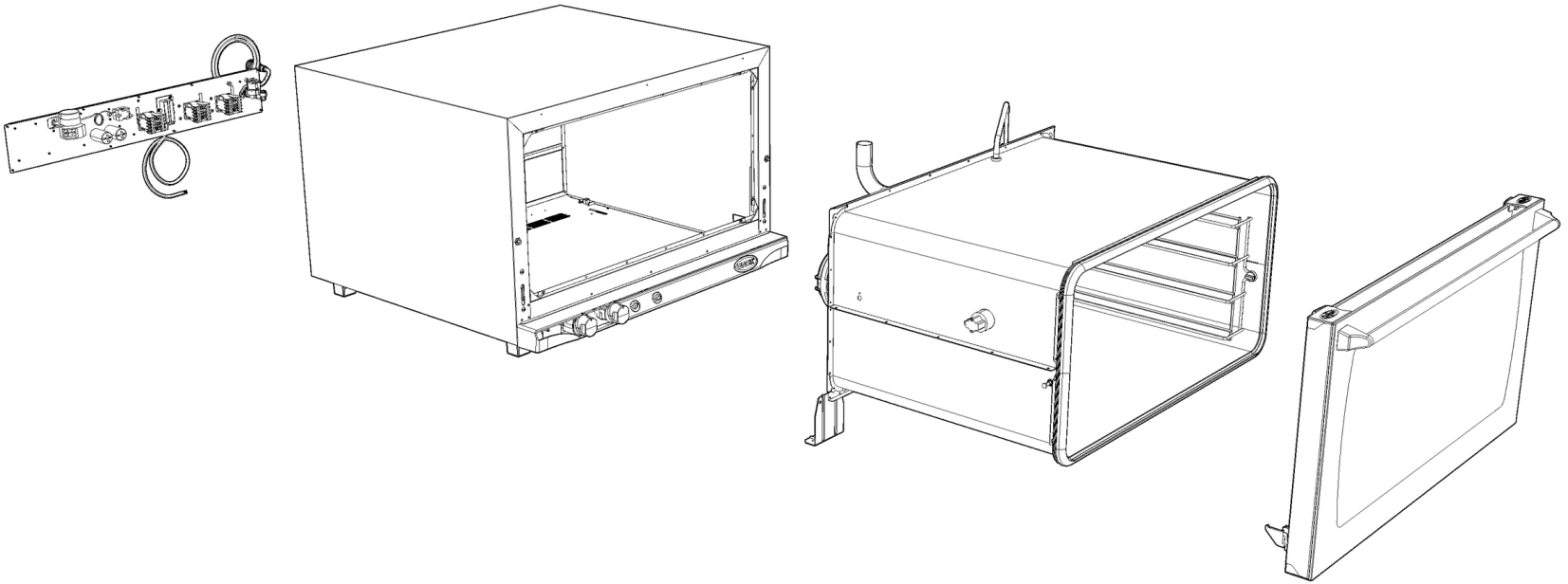

MOD:XFT193

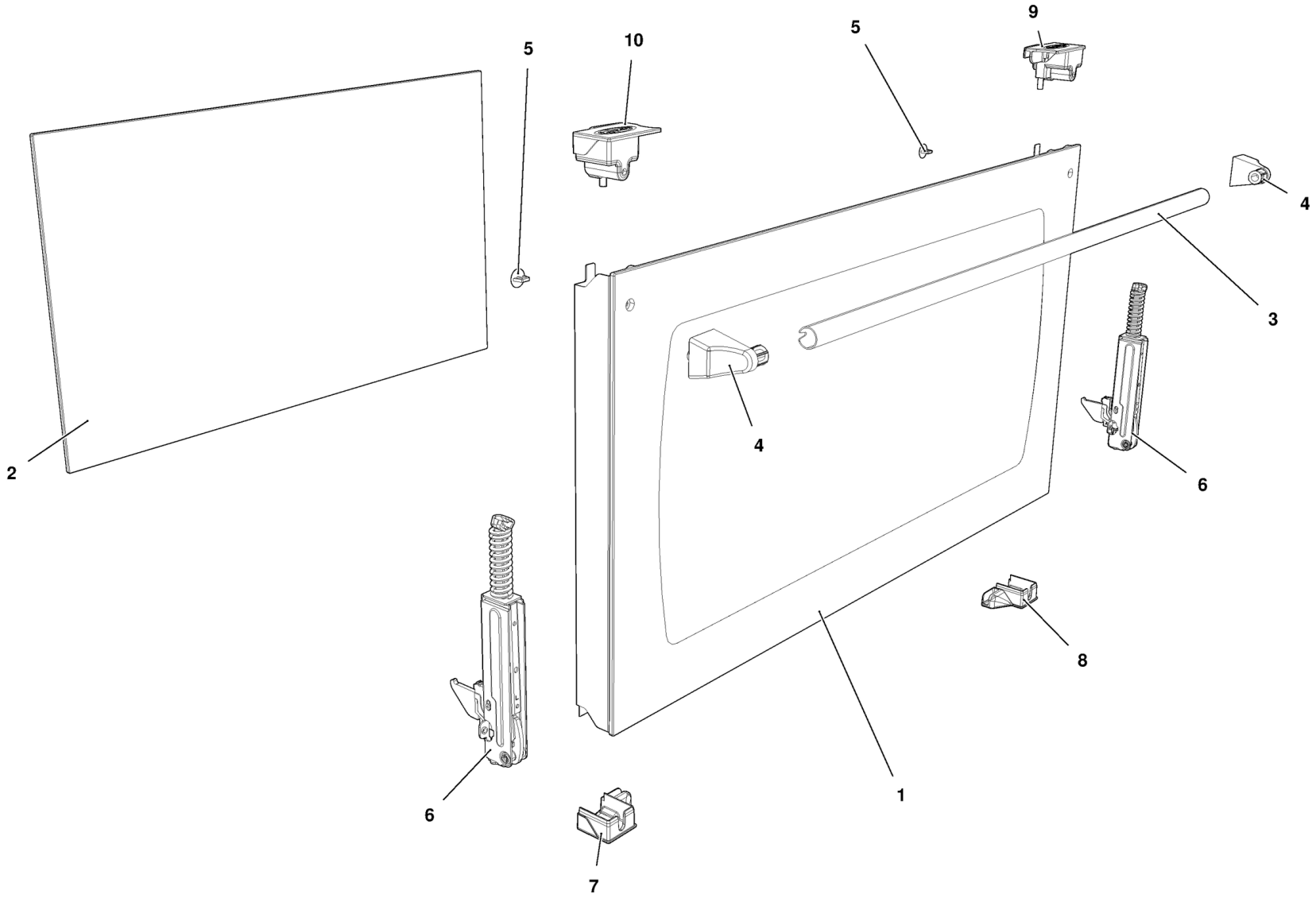

MOD:XFT193

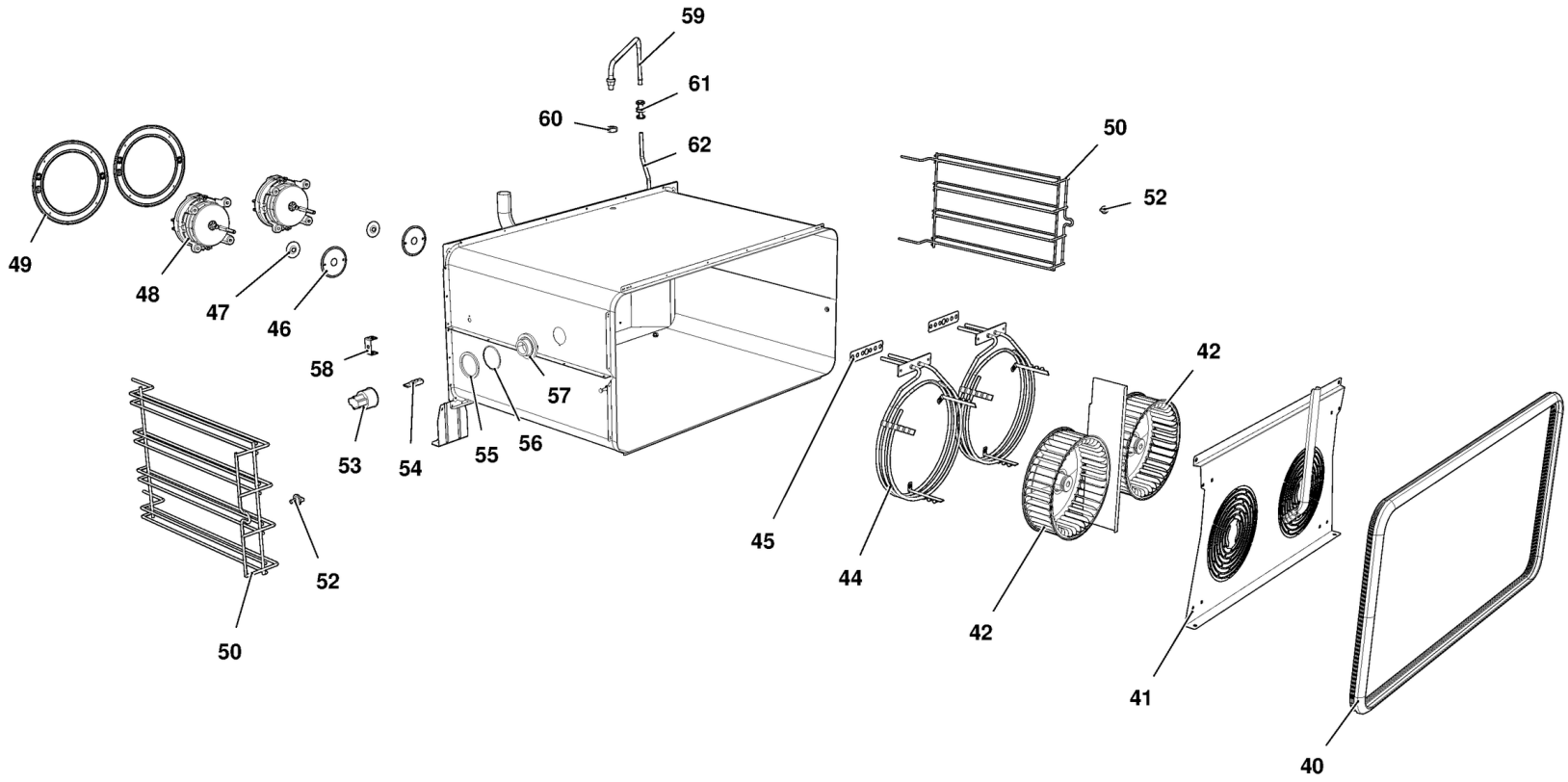

MOD:XFT193

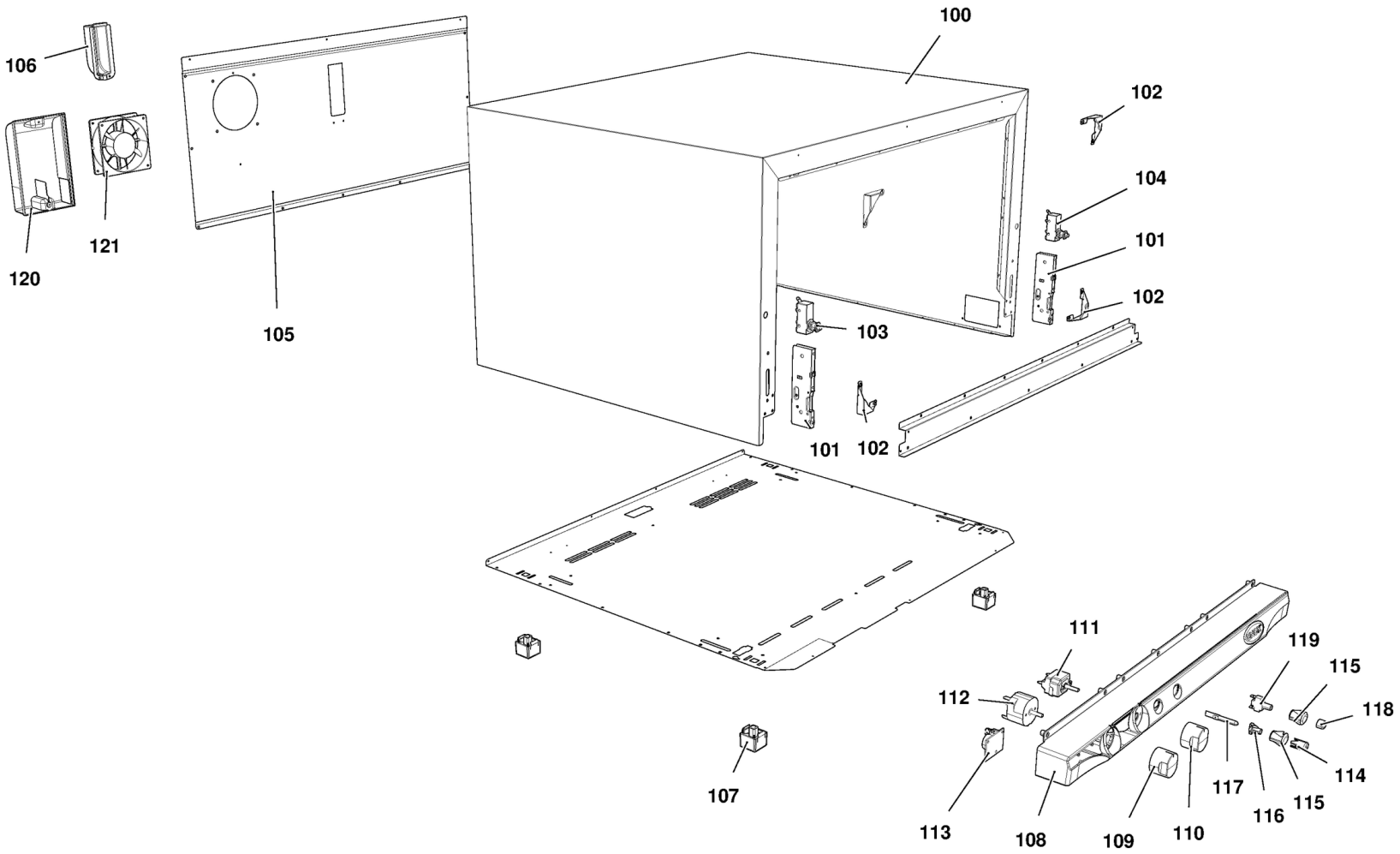
106
120
121
105
100
102
104
101
102
103
101
102
107
111
112
113
108
109
110
117
116
119
115
115
118
114

MOD:XFT193

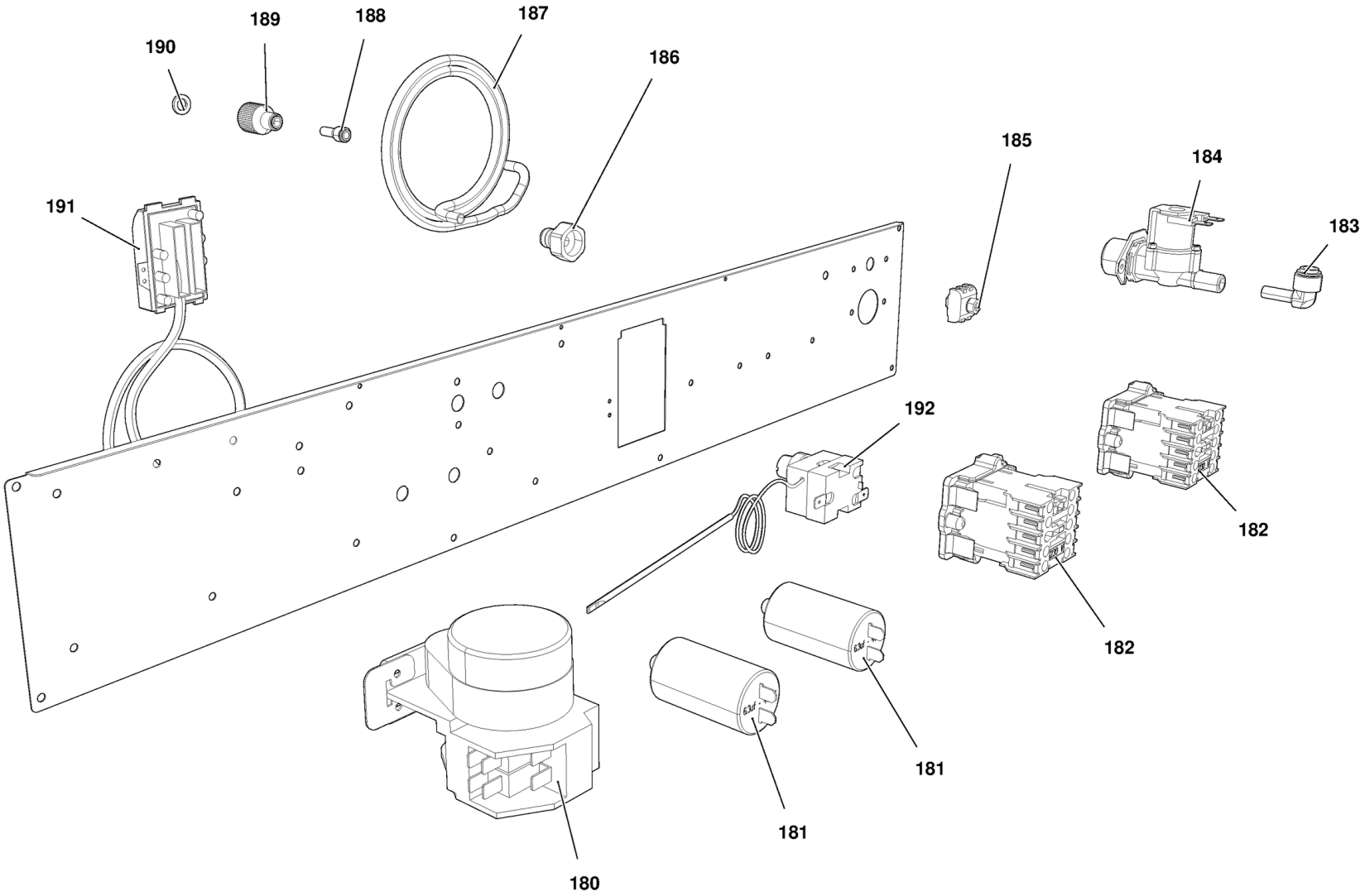

MOD:XFT193

IT

Descrizione codici

1	VT1072A	VETRO EST. 798X424 NERO XF190/193/195
2	VT1070B	VETRO INTERNO 715X415X6 BETFL
3	0H1930B	TUBO MANIGLIA L= 718 Ø18x1
4	MG1015B	TERMINALE MANIGLIA L.MISS/L.MICRO/CHEFTO
5	VM1025A	TAPPO NYLON PA66 V2 GRIGIO Ø16
6	CR1050A	CERNIERA PORTA FORNO RIBALTA XVC104-LM
7	VM1919A	TAPPO COLONNINA INF SX
8	VM1918A	TAPPO COLONNINA INF DX
9	VM1916A	TAPPO COLONNINA SUP DX
10	VM1917A	TAPPO COLONNINA SUP SX
40	GN1354A	GN1110A-GUARNIZIONE PORTA LM ROSSELLA
41	0G1125C	CARTER ARIA LM ROSSELLA
42	VN1025A	VENTOLA D=196 H=61 38 PALE INOX DADO M8
42	VN1025A	VENTOLA D=196 H=61 38 PALE INOX DADO M8
44	RS1090A	RESISTENZA CIRCOLARE D=230 3 SPIRE
45	GN1327A	GUARNIZIONE RES. 100X22
46	0H3020A	DISCO TENUTA ALBERO MOTORE
47	GN1140A	GUARNIZIONE PORTAMOTORE STAMP.
48	VN1130A	MOTORE FORNO 330W 230V 50/60HZ
49	0H3586A	LAMIERA PROTEZIONE MOTORE ZINCATO
50	GRL1025A	GRIGLIA LATERALE DX/SX CROMATA
50	GRL1025A	GRIGLIA LATERALE DX/SX CROMATA
52	VM1815A	NOTTOLINO M6 CROMATO FISS. GRIGLIE
53	VE1015A	PORTA LAMPADA SERIE 2 PER LAMPADA
54	VE1005A	LAMPADA HALOPIN 25W
55	GN1065A	GUARNIZIONE PORTALAMPADA DE=53.2
56	GN1055A	OR 46x2 VMQ 70 ROSSO
57	VT1195A	VETRO COPRILAMPADA BOROSILICATO TEMPRATO
58	0H4820A	STAFFA SOSTEGNO BULBO
59	0H1990A	TUBO EST. UMIDITA' + RC1165A0
60	RC1170A	DADO M14 H=8 CH=22 INOX
61	EL1055A	RIDUZIONE INTERMEDIA D10-D8
62	TB2034A	TB1815A-IMPIANTO IDRICO FORNI LMS
100	0D1285G	MANTELLO LM ROSSELLA
101	CR1000A	ATTACCO CERNIERA PORTA FORNO RIBALTA
102	0H1450A	ANGOLO FACCIATA MUFFOLA INOX XB-XV-XG
103	VE1295A	MICROINTERRUTTORE PORTA MK 16A 230V UL
104	VE1295A	MICROINTERRUTTORE PORTA MK 16A 230V UL
105	0F1095D	SCHIENA LM ROSSELLA
106	VM1951A	CUFFIA COPRICAMINO IP
107	PD1001A	PIEDINO 35X35 H26 PLASTICA+GOMMA GRIGIO
108	VM2019A	CRUSCOTTO COMANDI MANUAL LMiss800
109	MN1090B	MANOPOLA TIMER 0-60 MIN LM
110	MN1091B	MANOPOLA SERIGR. TERMOSTATO 80-260°C
111	TR1100A	TERMOSTATO REG. 269°C 55.19052.80
112	TM1005A	TIMER MI2 60 MIN 250V 16A
113	TM1000C	SUONERIA ELETTRONICA 15 SEC 230V
114	VE1530A	GEMMA ELLITTICA AZZURRA TERMOMETRO ORO
115	VE1170A	SUPPORTO D16 ELLITTICO NICHEL OPACO
116	VM1762A	SUPPORTO LAMPADA INTERNO
117	VE1535A	LED BIANCO 230V
118	VM1775A	TASTO ARGENTO OPACO NUVOLETTA ORO
119	VE1562A	PULSANTE UNIPOLARE NA
120	VM1556A	PROTEZIONE VENTOLA RAFFREDAMENTO CT-BT
121	VN1163A	VENTOLA RAFFREDDAMENTO 230V
180	VE1555A	INVERTITORE DI MARCIA
181	VE1110A	CONDENSATORE 6,3 µF 450VAC 50/60Hz
182	VE1115A	MINICONTATTORE QUADRIPOLARE 20 A 230 V
183	EL1195B	RACCORDO GOMITO D8F-D8M
184	EL1085A	ELETTR.SING. ATT. J.GUEST INCORPORATO
185	VM1750A	MORSETTIERA A PETTINE
186	RC1030A	RACCORDO DIRITTO D=8 - 3/4 FEMMINA JOHN
187	TB1079A	TUBO D8 ALLACCIAMENTO RETE LMiss
188	RC1002A	RACCORDO RIDUZIONE CODOLO 10M-8F
189	RC1365A	RACCORDO JG FEMMINA 3/4"-10
190	GN1200A	GUARNIZIONE D=24 RACCORDO 3/4 GOMMA
191	CE1130A	CAVO 5X1,5MMQ H07RN-F L=1,5M + MORS.K1/6
192	TR1136A	TERMOSTATO SIC. UNIP. 330°C

MOD:XFT193

EN

Codes descriptions

1	VT1072A	LINE MISS ROSSELLA BLACK EXTERNAL GLASS
2	VT1070B	INTERNAL GLASS 715x415x6 BTFL
3	0H1930B	HANDLE TUBE L= 718 Ø18x1
4	MG1015B	L.MISS/L.MICRO/CHEFTOP HANDLE TERMINALS
5	VM1025A	NYLON LID PA66 V2 GREY Ø16
6	CR1050A	DOOR HINGE XVC104-LM ROSSELLA
7	VM1919A	LEFT LOWER COLUMN CAP
8	VM1918A	RIGHT LOWER COLUMN CAP
9	VM1916A	RIGHT UPPER COLUMN CAP
10	VM1917A	LEFT UPPER COLUMN CAP
40	GN1354A	LineMiss ROSSELLA DOOR GASKET - GN1110A
41	0G1125C	LineMiss ROSSELLA FAN GUARD
42	VN1025A	FAN D=196 H=61 38 BLADES STAINLESS
42	VN1025A	FAN D=196 H=61 38 BLADES STAINLESS
44	RS1090A	CIRC.HEAT. ELEMENT D=230 3 TURNS
45	GN1327A	HEATING ELEMENT GASKET 100X22X0.8
46	0H3020A	MOTOR SHAFT SEALING DISC
47	GN1140A	MOLDED MOTOR SUPPORT GASKET
48	VN1130A	330W 230V 50/60HZ MOTOR
49	0H3586A	ZINCATE MOTOR GUARD PLATE XBC-XVC
50	GRL1025A	RIGHT/LEFT LAT.GRID CHROMIUM-PLATED
50	GRL1025A	RIGHT/LEFT LAT.GRID CHROMIUM-PLATED
52	VM1815A	M6 LATERAL SUPPORTS FIXING BOLT
53	VE1015A	LAMP HOLDER SERIE 2 FOR HALOGEN LAMP
54	VE1005A	HALOGEN LAMP 33W ENERGY SAVER
55	GN1065A	SEAL FOR LAMP GLASS COVER
56	GN1055A	OR 46x2 VMQ 70 RED
57	VT1195A	BOROSILICATE LIGHT BULB GLASS COVER
58	0H4820A	BULB HOLDING BRACKET
59	0H1990A	EXTERNAL WATER PIPE + STAINLESS
60	RC1170A	STAINLESS STEEL NUT M14 H=8 CH=22
61	EL1055A	INTERMEDIATE REDUCTION FROM D=10 TO D=8
62	TB2034A	L.MISS WATER SYSTEM - TB1815A
100	0D1285G	L.MISS ROSSELLA EXTERNAL CHASING
101	CR1000A	HINGE LATCH L.M.
102	0H1450A	XB-XV-XG ST. STEEL MUFFLE FRONT CORNER
103	VE1295A	DOOR MICROSWITCH MK 16A 230V UL
104	VE1295A	DOOR MICROSWITCH MK 16A 230V UL
105	0F1095D	LineMiss ROSSELLA EXTERNAL BACK PANEL
106	VM1951A	IP CHIMNEY COVER
107	PD1001A	FOOT 35X35 H26 GREY PLASTIC+RUBBER
108	VM2019A	L.MISS MANUAL 60x40 CONTROL BOARD
109	MN1090B	0-60 MIN TIMER KNOB
110	MN1091B	80-260°C THERMOSTAT KNOB
111	TR1100A	269°C ADJUSTABLE THERMOSTAT 55.19052.80
112	TM1005A	TIMER MI2 60 MIN 250V 16A
113	TM1000C	ELECTRICAL BUZZER 15 SECS 230 V
114	VE1530A	BLUE LIGHT COVER GOLD THERMOMETER
115	VE1170A	OPAQUE NICKEL ELLIPTICAL SUPPORT D16
116	VM1762A	INNER LAMP SUPPORT
117	VE1535A	WHITE LED 230V
118	VM1775A	OPAQUE SILVER KEY WITH GOLD "CLOUD"
119	VE1562A	UNIPOLAR NA PUSH BUTTON
120	VM1556A	XBC-XVC COOLING FAN GUARD
121	VN1163A	COOLING FAN 230V
180	VE1555A	REVERS.SWITCH MOTOR P19.5J.02.H6.17
181	VE1110A	CONDENSER 6,3 µF 450VAC 50/60Hz
182	VE1115A	MINICONTACTOR WITH 4 POLES 20 A 230 V
183	EL1195B	D8F-D8M ELBOW CONNECTION
184	EL1085A	WATER SINGLE ELECTROVALVE WITH
185	VM1750A	TERMINAL BOARD
186	RC1030A	STRAIGHT JOINT D=8-3/4 FEMALE JOHN
187	TB1079A	L.MISS D8 WATER PIPE
188	RC1002A	10M-8F J.G. TERMINAL REDUCTION FITTING
189	RC1365A	3/4"-10 JG FEMALE CONNECTION
190	GN1200A	3/4 CONNECTION SEAL D=24 RUBBER+NET
191	CE1130A	CABLE 5x1,5MMQ H07RN-F L=1,5M
192	TR1136A	SAFETY THERMOSTAT UNIP. 330°C