Зип Общепит
vsezip.ru
+7(812)987-08-81

SELF-CONTAINED FLAKER

FM-150KE-50(-N)

PARTS LIST

[HE]

F080-C127, F080-C129

B-1 APR. 2012
C-1 APR. 2013

F080-3693 (0217)

Зип Общепит
vsezip.ru
+7(812)987-08-81

AUXILIARY CODE

U - 1

The auxiliary code is the first two characters in the serial number. The first character indicates the production year. Years progress or regress in alphabetical order. The series of letters and skipped letters depend on UL listing, production, and model. See the auxiliary code(s) and corresponding year(s) on the front cover.

The second character indicates significant part changes within the same year. Base is "1" and this number advances for each change. If there is no significant part change at the turn of the year, this number starts from "0."

MARKS LOCATED UNDER THE AUXILIARY CODE

- \- = Part deleted.
- x = Part deleted and replaced by "o" part.
- o = New part in place of "x" part.

FASTENER PART NUMBER

SCREWS

F S T 0 3 0 6 F 0

- Special treatment (0 - 9)
- Material *1
- Length (mm)
- Nominal diameter (mm)
- Description *2
- Fastener

NUTS & WASHERS

F W S P 0 5 S 0

- Special treatment (0 - 9)
- Material *1
- Nominal diameter (mm)
- Description *2
- Fastener

*1 Material

F: Steel
S: Austenitic stainless steel
M: Martensitic stainless steel
B: Copper alloy
P: Polycarbonate
N: Polyamide
V: PVC
A: ABS
X: Polyacetal
L: Aluminum

*2 Description

First letter
S: Machine screw
T: Tapping screw
M: Wood screw
B: Bolt
W: Washer
N: Nut

Зип Общепит
vsezip.ru
7(812)987-08-81

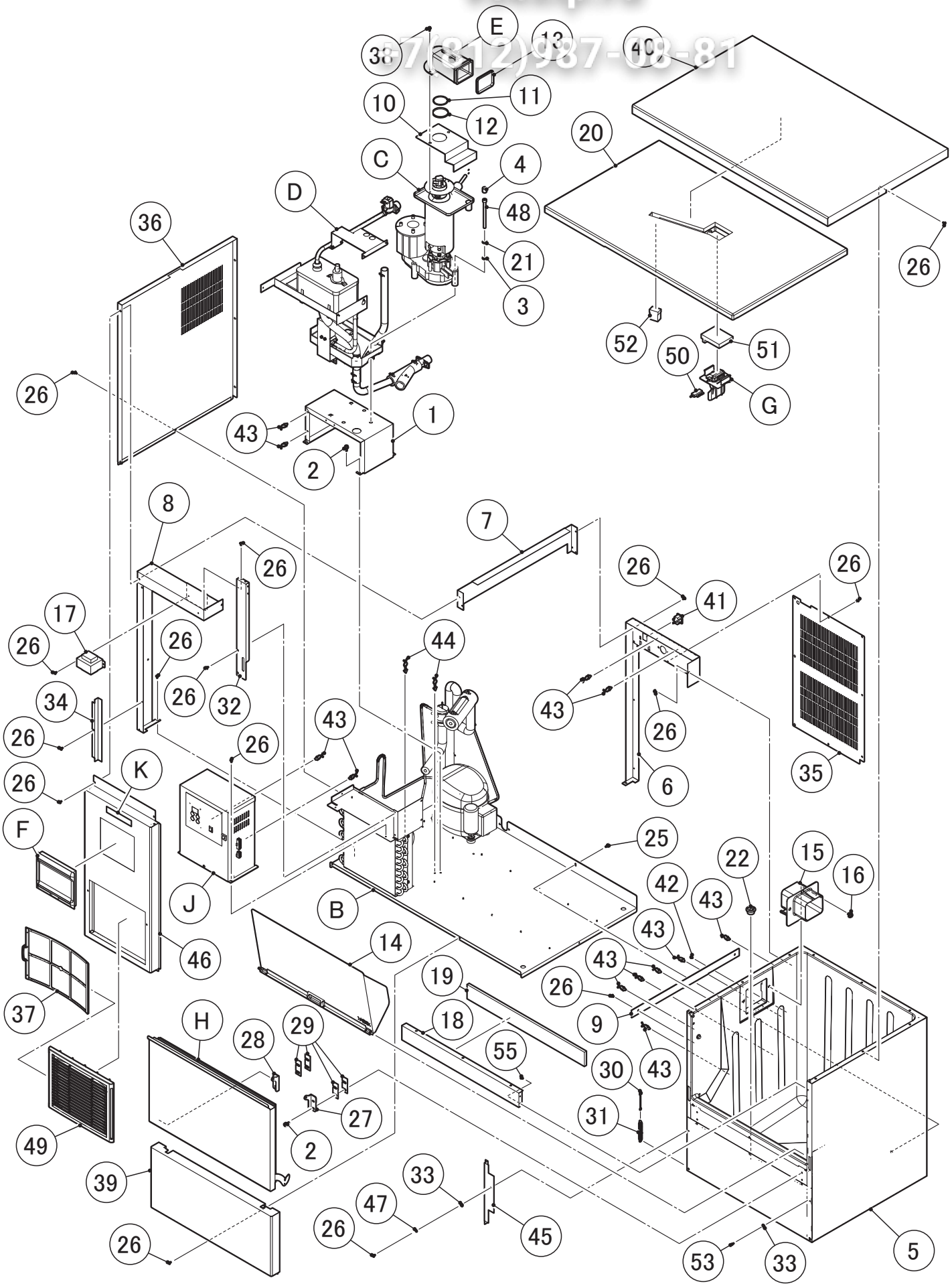

Зип Общепит
vsezip.ru
+7(812)987-08-81

HE

MODEL: FM-150KE-50,
FM-150KE-50-N

TITLE: **A. ICE FLAKER ASSY**

INDEX NO.	DESCRIPTION	MATERIAL OR MODEL NUMBER	PART NUMBER	REQ'D NUMBER				
				B-1 C-0	C-1			
B	REFRIGERATION CIECUIT		121616001	1	1			
C	ICE MAKING UNIT		376130A01	1	1			
		F080-C129	376130001	1	1			
D	WATER CIRCUIT ASSY		121617A01	1	1			
E	SPOUT ASSY		358941A01	1	1			
F	WINDOW PANEL ASSY		348243A03	1	1			
G	ACTUATOR ASSY		350301A01	1	1			
H	DOOR ASSY		373748A01	1	1			
J	CONTROL BOX ASSY		261574A02	1	1			
K	LABEL LOCATION		261552A04	1	1			
		F080-C129	261552A05	1	1			
N	ACCESSORIES		A02455-01	1	1			
1	BRACKET / GM		376111G01	1	1			
2	HEX HEAD BOLT (SPRING WASHER AND FLAT WASHER)		FBK0616S0	8	8			
3	SEAL WASHER		458299-01	3	3			
4	VINYL CAP		451272-01	3	3			
5	BIN - FOAMED		261634G01	1	1			
6	REAR FRAME		261572M01	1	1			
7	SIDE FRAME		376024M01	1	1			
8	FRONT FRAME		263035M01	1	1			
9	BRACE - EVAPORATOR		476423M01	1	1			
10	BRACKET-EVA		376026M01	1	1			
11	O-RING		7616-G045	1	1			
12	RING		432661-03	1	1			
13	PACKING (A) - SPOUT		427152-02	1	1			
14	SLOPE		362590G01	1	1			
15	SPOUT(B)		232654-02	1	1			
16	BOLT		462612-01	2	2			
17	TRANSFORMER		P02623-01	1	1			
18	FRONT FRAME - BIN		466310-01	1	1			
19	INSULATION - FRONT		466394-02	1	1			
20	UPPER PANEL		258352G01	1	1			

Зип Общепит
vsezip.ru
+7(812)987-08-81

HE

MODEL: FM-150KE-50,
FM-150KE-50-N

TITLE: **A. ICE FLAKER ASSY**

INDEX NO.	DESCRIPTION	MATERIAL OR MODEL NUMBER	PART NUMBER	REQ'D NUMBER				
				B-1 C-0	C-1			
21	SPRING WASHER		FWSP08S0	3	3			
22	DRAIN PIPE		466275-01	1	1			
25	HEX HEAD BOLT (SPRING WASHER AND FLAT WASHER)		FBK0512S0	1	1			
26	TRUSS HEAD TAPPING SCREW (S-TITE)		FTS0408M0	38	38			
27	HINGE (R)		4H2583-01	1	1			
28	HINGE (L)		4H2584-01	1	1			
29	HINGE SPACER (B)		4H0605-02	2	2			
30	HOOK		404060-07	1	1			
31	SPRING		4H0823-01	1	1			
32	FRONT PLATE		358898-01	1	1			
33	TAPER COLLAR		4H0171-01	2	2			
34	BARRIER - AIR		466295-01	1	1			
35	REAR PANEL(L)		261575M01	1	1			
36	SIDE PANEL(L)		261576M01	1	1			
37	AIR FILTER		2X0416G01	1	1			
38	HEX HEAD BOLT (SPRING WASHER AND FLAT WASHER)		FBK0412S0	3	3			
39	FRONT PANEL (R)		362596-01	1	1			
40	TOP PANEL		241759-02	1	1			
41	CONNECTOR		P00245-02	1	1			
42	PAN HEAD MACHINE SCREW (SPRING WASHER AND FLAT WASHER)		FSK0408S0	1	1			
43	CLAMP	No. 249	427902-03	12	12			
44	CLAMP	No.1F55	427902-07	2	2			
45	BARRIER - AIR		468195-01	1	1			
46	FRONT PANEL		376112G01	1	1			
47	FLAT WASHER		FWPL04F0	1	1			
48	HEXAGON SOCKET HEAD CAP SCREW		461285-01	3	3			
49	LOUVER		1H4811P01	1	1			
50	REED SWITCH		453861-02	1	1			
51	INSULATION (A) - UP		458667-01	1	1			
52	INSULATION (B) - UP		458668-01	1	1			
53	RIVET	SSD43BS	7170-0003	1	1			

Зип Общепит
vsezip.ru
+7(812)987-08-81

HE

MODEL: FM-150KE-50, FM-150KE-50-N			TITLE: **A. ICE FLAKER ASSY**					
INDEX NO.	DESCRIPTION	MATERIAL OR MODEL NUMBER	PART NUMBER	REQ'D NUMBER				
				B-1 C-0	C-1			
55	RIVET	SSD42SSBS	7170-0002	4	4			

Зип Общепит
vsezip.ru
+7(812)987-08-81

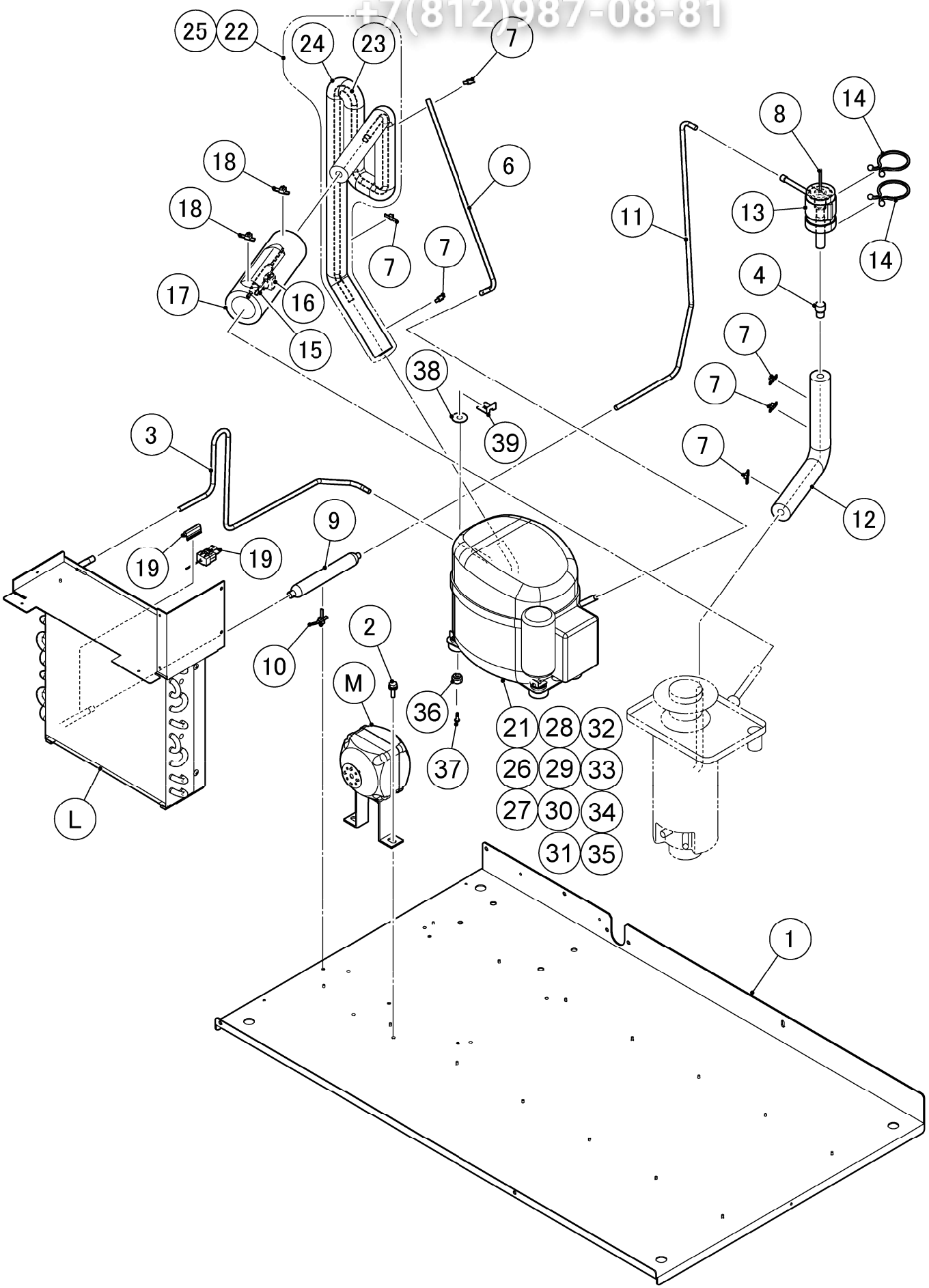

Зип Общепит
vsezip.ru
+7(812)987-08-81

HE

MODEL: **FM-150KE-50, FM-150KE-50-N**

TITLE: **B. REFRIGERATION CIRCUIT**

INDEX NO.	DESCRIPTION	MATERIAL OR MODEL NUMBER	PART NUMBER	REQ'D NUMBER				
				B-1 C-0	C-1			
L	CONDENSER ASSY		261567A01	1	1			
M	FAN MOTOR ASSY		3Y5886A01	1	1			
1	BASE		262147G01	1	1			
2	BOLT		458660-01	2	2			
3	COPPER TUBE (A) -HIGE SIDE		376027M01	1	1			
4	REDUCER		421904-01	1	1			
6	PROCESS TUBE - LOW SIDE		476426M01	1	1			
7	TIE	CV-150	7920-0003	6	6			
8	EXPANSION VALVE		446808-01	1	1			
9	DRIER		P00026-01	1	1			
10	TIE		457167-01	1	1			
11	COPPER TUBE B-H		376028M01	1	1			
12	INSULATION TUBE		H71030300	1	1			
13	VALVE COVER		3Y3196P01	1	1			
14	CLAMP		P00752-01	2	2			
15	HOLDER - EXPV		451267-01	1	1			
16	CLAMP		443461-01	1	1			
17	Insulation Tube		H73858B15	1	1			
18	TIE		7920-0028	2	2			
19	THERMISTOR ASSY	CV-300	476475G01	1	1			
20	THERMISTOR - HOLDER		458132-01	1	1			
21	COMPRESSOR		P02531-01	1	1			
22	SUCTION PIPE AY		261568A01	1	1			
23	SUCTION PIPE AY		261568M01	1	1			
24	INSULATION TUBE	7762-1030	H71030H10	1	1			
25	NEOBELT PC		446470-01	1	1			
26	TERMINAL BOARD		P02612-01	1	1			
27	STARTING RELAY		P03286-01	1	1			
28	PROTECTOR		P03287-01	1	1			
29	PROTECTOR RETAINER		P02815-01	1	1			

Зип Общепит
vsezip.ru
+7(812)987-08-81

HE

MODEL: **FM-150KE-50, FM-150KE-50-N**

TITLE: **B. REFRIGERATION CIRCUIT**

INDEX NO.	DESCRIPTION	MATERIAL OR MODEL NUMBER	PART NUMBER	REQ'D NUMBER				
				B-1 C-0	C-1			
30	SELF TAPPING SCREW M4-11		P02615-01	1	1			
31	SELF TAPPING SCRW M4-21		P02616-01	1	1			
32	SCREW		P00840-01	2	2			
33	HERMETIC TERMINAL COVER		P03143-01	1	1			
34	START CAPACITOR		P03288-01	1	1			
35	BRACKET FOR CAPACITOR		P02610-01	1	1			
36	RUBBER GROMMET		P02608-01	4	4			
37	PIN		P02605-01	4	4			
38	WASHER		P02606-01	4	4			
39	CLAMP		P02607-01	4	4			

Зип Общепит
vsezip.ru
+7(812)987-08-81

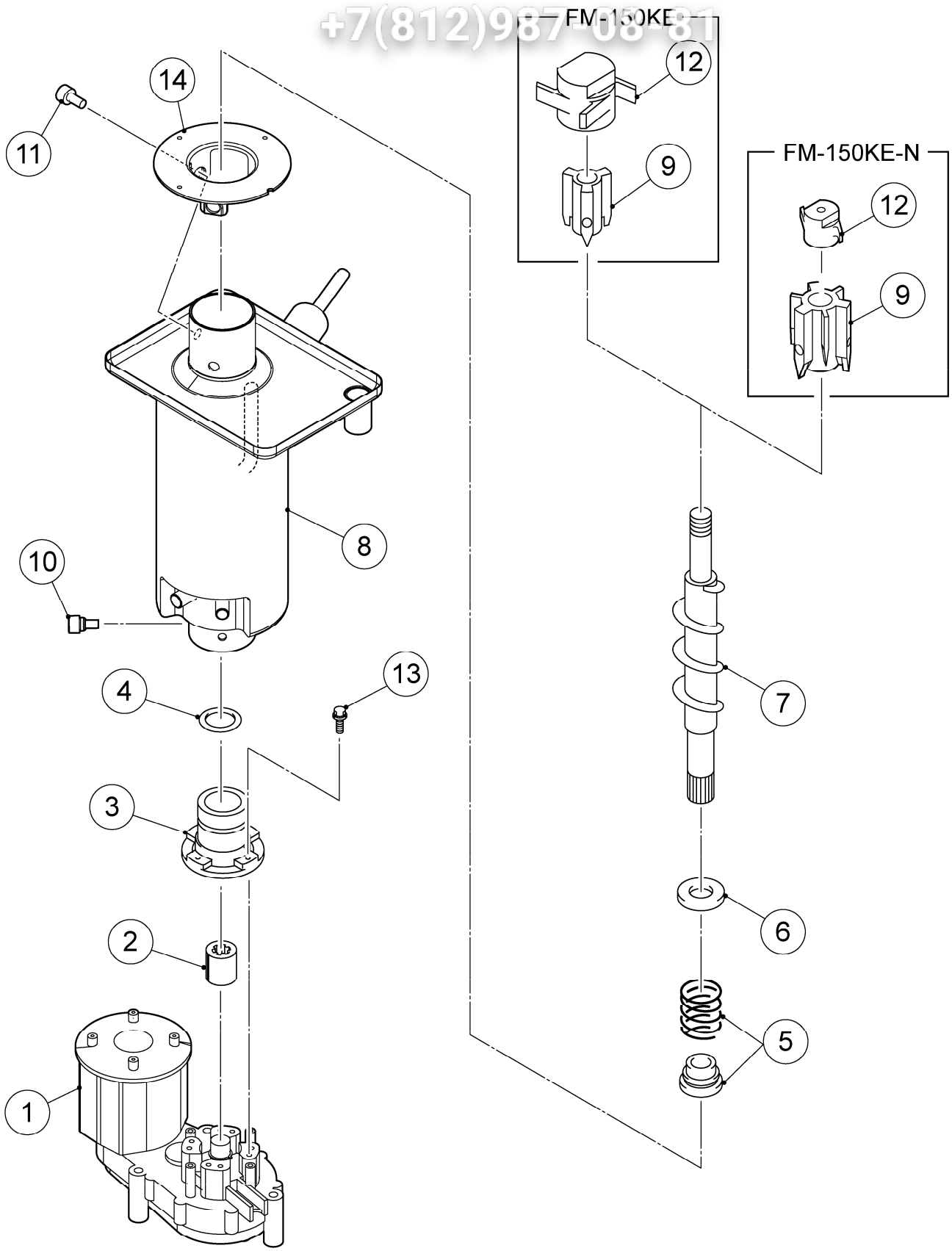

Зип Общепит
vsezip.ru
+7(812)987-08-81

HE

MODEL: **FM-150KE-50, FM-150KE-50-N**

TITLE: **C. ICE MAKING UNIT**

INDEX NO.	DESCRIPTION	MATERIAL OR MODEL NUMBER	PART NUMBER	REQ'D NUMBER				
				B-1 C-0	C-1			
1	GEAR MOTOR		P02068-02	1	1			
2	COUPLING-SPLINE ASSY		418316-01	1	1			
3	HOUSING		206013G05	1	1			
4	O RING		7616-G040	1	1			
5	MECHANICAL SEAL		432491-01	1	1			
6	RING(B)		432494-01	1	1			
7	AUGER		361013G01	1	1			
8	EVAPORATOR		241041G02	1	1			
9	EXTRUDING HEAD-45F		327140G01	1	1			
	EXTRUDING HEAD(NUGGET)	F080-C129	327141G01	1	1			
10	SCREW		P01718-01	4	4			
11	SEALBOLT-M8		P01768-01	3	3			
12	4 CUTTER		427137-01	1	1			
	CUTTER	F080-C129	440905-01	1	1			
13	HEX.BOLT SW	6 x 20	458660-01	4	4			
14	FLANGE/45		464843-01	1	1			

Зип Общепит
vse2ip.ru
+7(812)987-08-81

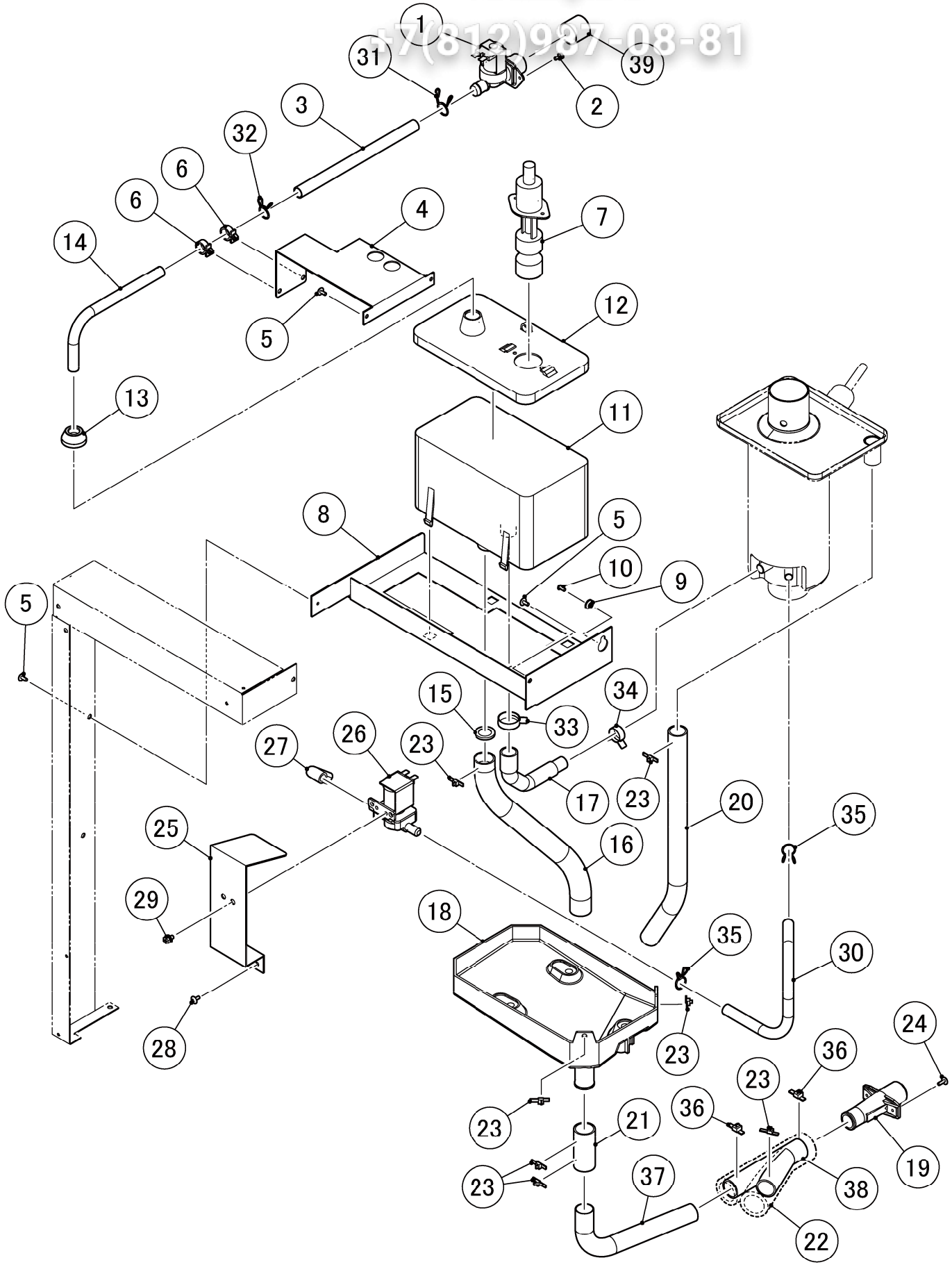

Зип Общепит
vsezip.ru
+7(812)987-08-81

HE

MODEL: FM-150KE-50,
FM-150KE-50-N

TITLE: **D. WATER CIRCUIT**

INDEX NO.	DESCRIPTION	MATERIAL OR MODEL NUMBER	PART NUMBER	REQ'D NUMBER				
				B-1 C-0	C-1			
1	WATER VALVE		452993-01	1	1			
2	HEX HEAD BOLT		FBH0408S0	2	2			
3	SILICONE HOSE		4Y6912R01	1	1			
4	PIPE BRACKET		476456M01	1	1			
5	TRUSS HEAD MACHINE SCREW		FST0408F0	4	4			
6	CLAMP		428644-03	2	2			
7	FLOAT SWITCH		458279-01	1	1			
8	RESERVIOR BRACKET		362979-01	1	1			
9	TAPER COLLAR		4H0171-01	1	1			
10	RIVET	SSD43BS	7170-0003	1	1			
11	RESERVOIR		232626-01	1	1			
12	COVER - RESERVOIR		232627-01	1	1			
13	COVER - RESERVOIR INLET		415094-01	1	1			
14	WATER SUPPLY PIPE (A)		476457M01	1	1			
15	STOPPER COVER(R)		4X1497G01	1	1			
16	PVC Hose		HA2226300	1	1			
17	HOSE A		458308-01	1	1			
18	DRAIN PAN		261640P01	1	1			
19	DRAIN PIPE		321035-01	1	1			
20	PVC Hose		HA1923340	1	1			
21	PVC Hose		HA2226030	1	1			
22	INSULATION TUBE		H72636B18	1	1			
23	TIE	CV-150	7920-0003	7	7			
24	TRUSS HEAD TAPPING SCREW T2		FT20410S0	2	2			
25	BRACKET/WV		476458M01	1	1			
26	WATER VALVE		468655-01	1	1			
27	DRAIN PIPE		460263-01	1	1			
28	TRUSS HEAD MACHINE SCREW		FST0408S0	2	2			
29	HEX HEAD BOLT (SPRING WASHER AND FLAT ASHER)		FBK0508S0	2	2			
30	PVC Hose - FSA		HD0912240	1	1			

Зип Общепит
vsezip.ru
+7(812)987-08-81

HE

MODEL: FM-150KE-50, FM-150KE-50-N	TITLE: **D. WATER CIRCUIT**

INDEX NO.	DESCRIPTION	MATERIAL OR MODEL NUMBER	PART NUMBER	REQ'D NUMBER				
				B-1 C-0	C-1			
31	HOSE CLAMP		435934-03	1	1			
32	HOSE CLAMP		435934-02	1	1			
33	CLIP BAND		423866-08	1	1			
34	CLAMP		423866-04	1	1			
35	HOSE CLAMP		435934-01	2	2			
36	NYLON TIE	CV-200	7920-0010	2	2			
37	DRAIN PIPE		476676M01	1	1			
38	DRAIN JOINT		358882-01	1	1			
39	CAP		417323-01	1	1			

Зип Общепит
vsezip.ru
+7(812)987-08-81

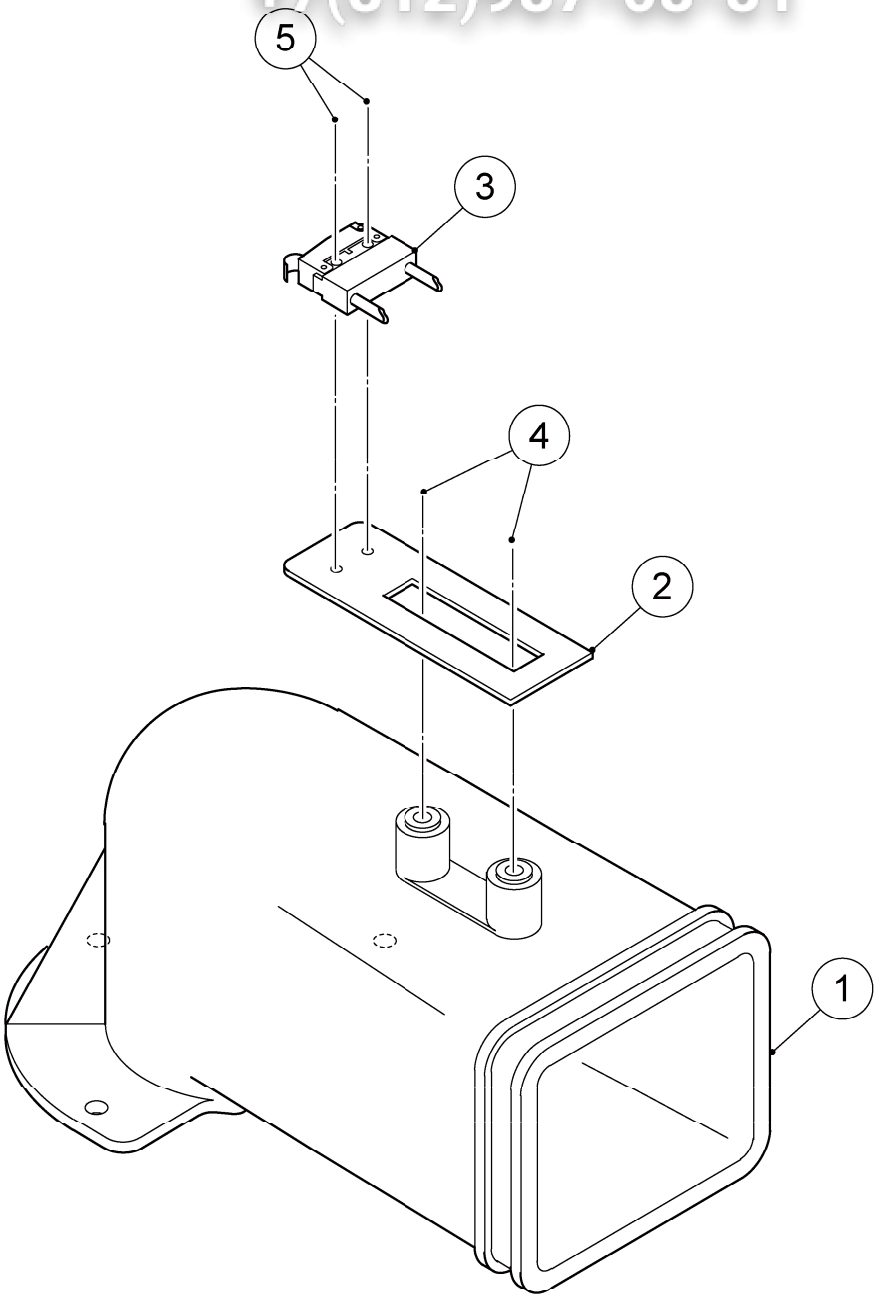

Зип Общепит
vsezip.ru
+7(812)987-08-81

HE

MODEL: **FM-150KE-50, FM-150KE-50-N**

TITLE: **E. SPOUT ASSY**

INDEX NO.	DESCRIPTION	MATERIAL OR MODEL NUMBER	PART NUMBER	REQ'D NUMBER				
				B-1 C-0	C-1			
1	SPOUT		232636G01	1	1			
2	SWITCH BRACKET		466282-01	1	1			
3	MICRO SWITCH	ABS1624318	443992-02	1	1			
4	(SPRING WASHER AND FLAT WASHER)		FSK0408S0	2	2			
5	(SPRING WASHER AND FLAT WASHER)		470416-01	2	2			

Зип Общепит
vsezip.ru
+7(812)987-08-81

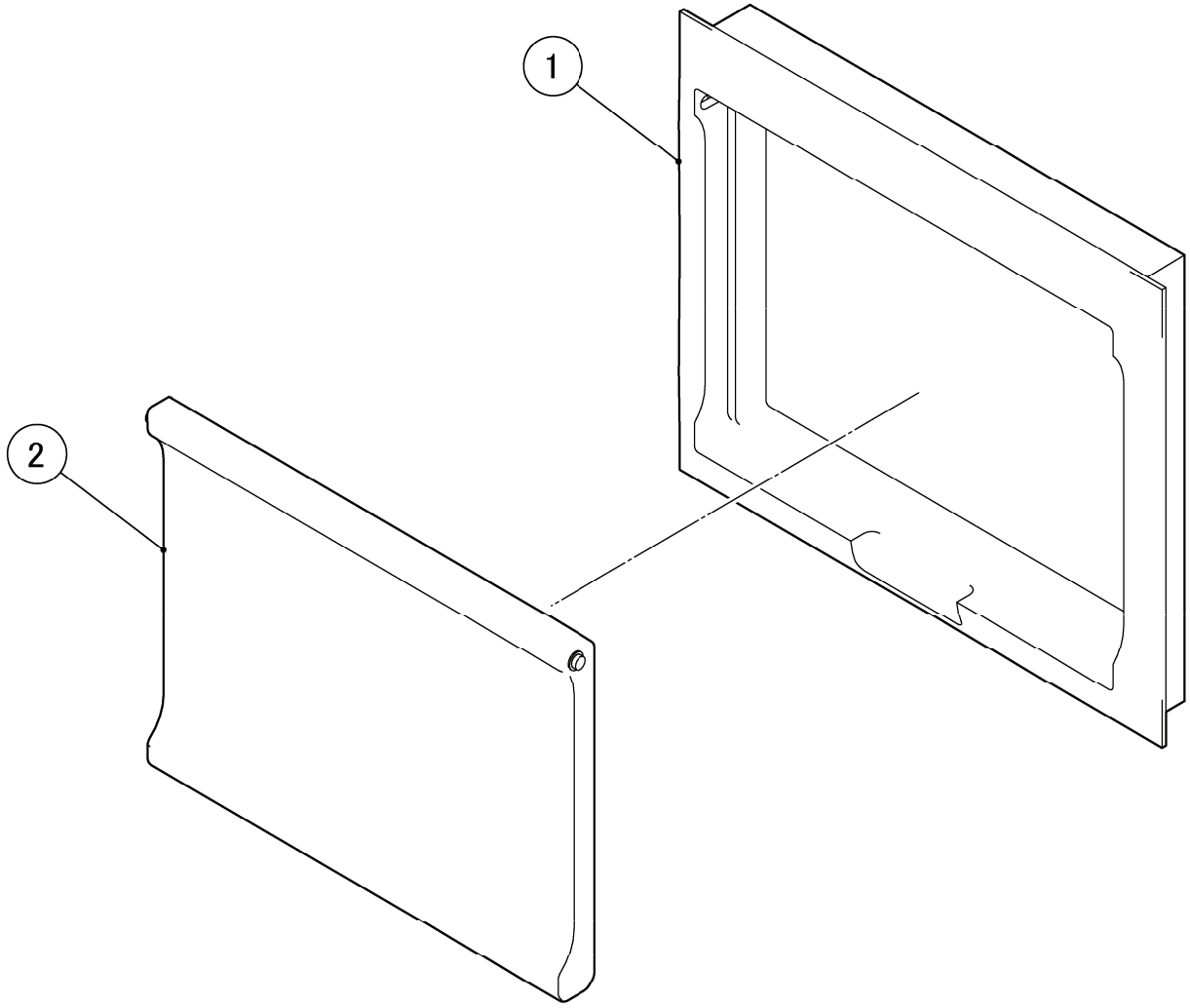

Зип Общепит
vsezip.ru
+7(812)987-08-81

HE

MODEL: **FM-150KE-50, FM-150KE-50-N**

TITLE: **F. WINDW PANEL ASSY**

INDEX NO.	DESCRIPTION	MATERIAL OR MODEL NUMBER	PART NUMBER	REQ'D NUMBER				
				B-1 C-0	C-1			
1	WIND FRAME		232648-01	1	1			
2	WIND PANEL		232649-03	1	1			

Зип Общепит
vsezip.ru
+7(812)987-08-81

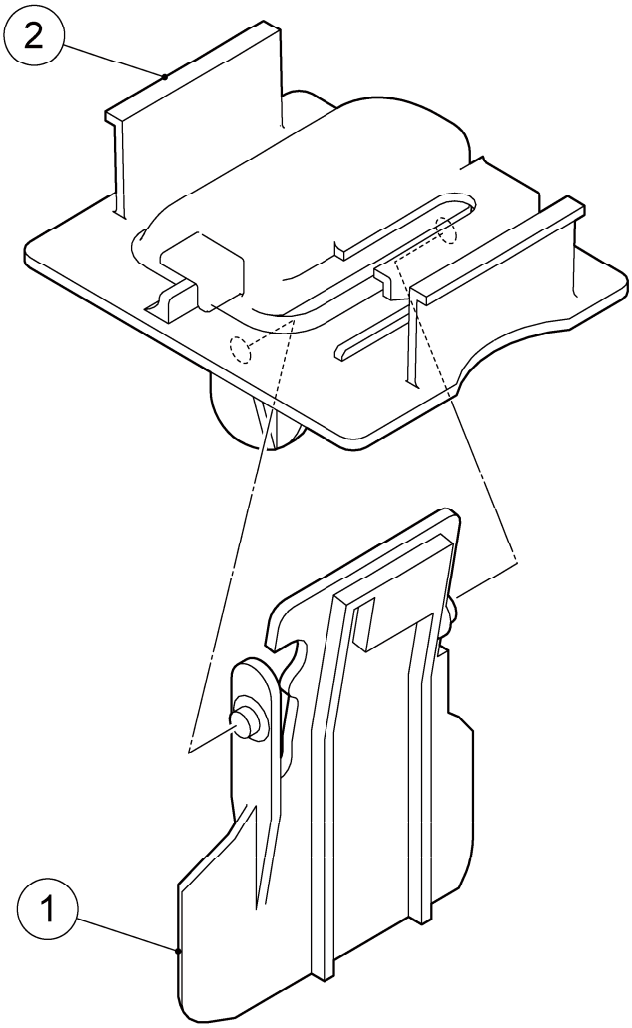

Зип Общепит
vsezip.ru
+7(812)987-08-81

HE

MODEL: **FM-150KE-50, FM-150KE-50-N**

TITLE: **G. ACTUATOR ASSY**

INDEX NO.	DESCRIPTION	MATERIAL OR MODEL NUMBER	PART NUMBER	REQ'D NUMBER				
				B-1 C-0	C-1			
1	ACTUATOR		345878G01	1	1			
2	ACTUATOR BASE		345879-01	1	1			

Зип Общепит
vsezip.ru
+7(812)987-08-81

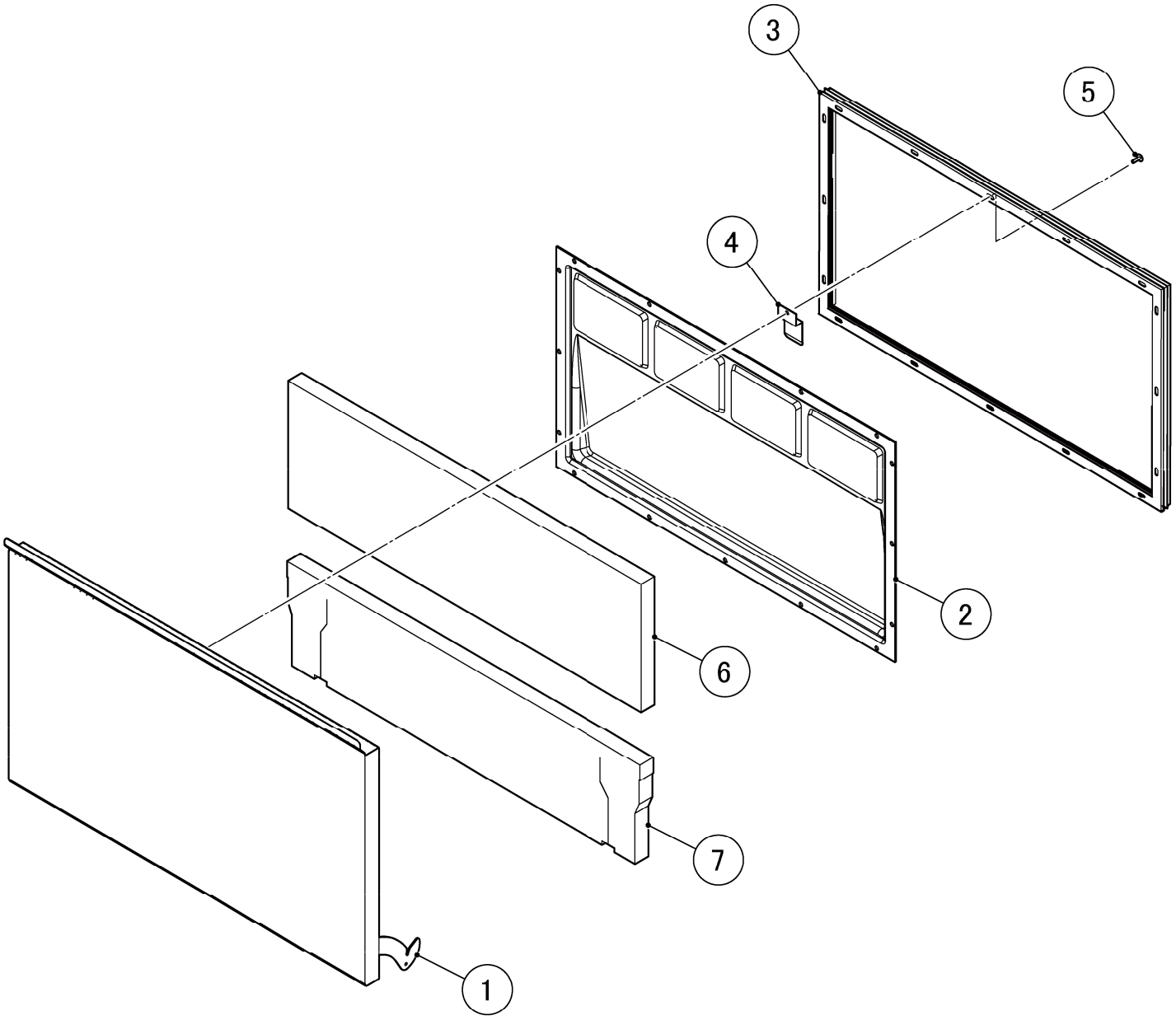

Зип Общепит
vsezip.ru
+7(812)987-08-81

HE

MODEL: **FM-150KE-50, FM-150KE-50-N**

TITLE: **H. DOOR ASSY**

INDEX NO.	DESCRIPTION	MATERIAL OR MODEL NUMBER	PART NUMBER	REQ'D NUMBER				
				B-1 C-0	C-1			
1	DOOR		373749G01	1	1			
2	REVERSE COVER		312697-01	1	1			
3	GASKET		312698-01	1	1			
4	CATCH - SLOPE		4H0439-01	1	1			
5	TRUSS HEAD TAPPING SCREW T2		FT20412M0	16	16			
6	INSULATION - DOOR(A5)		3Y2847P05	1	1			
7	INSULATION - DOOR(B5)		3Y2848P05	1	1			

Зип Общепит
vsezip.ru
+7(812)987-08-81

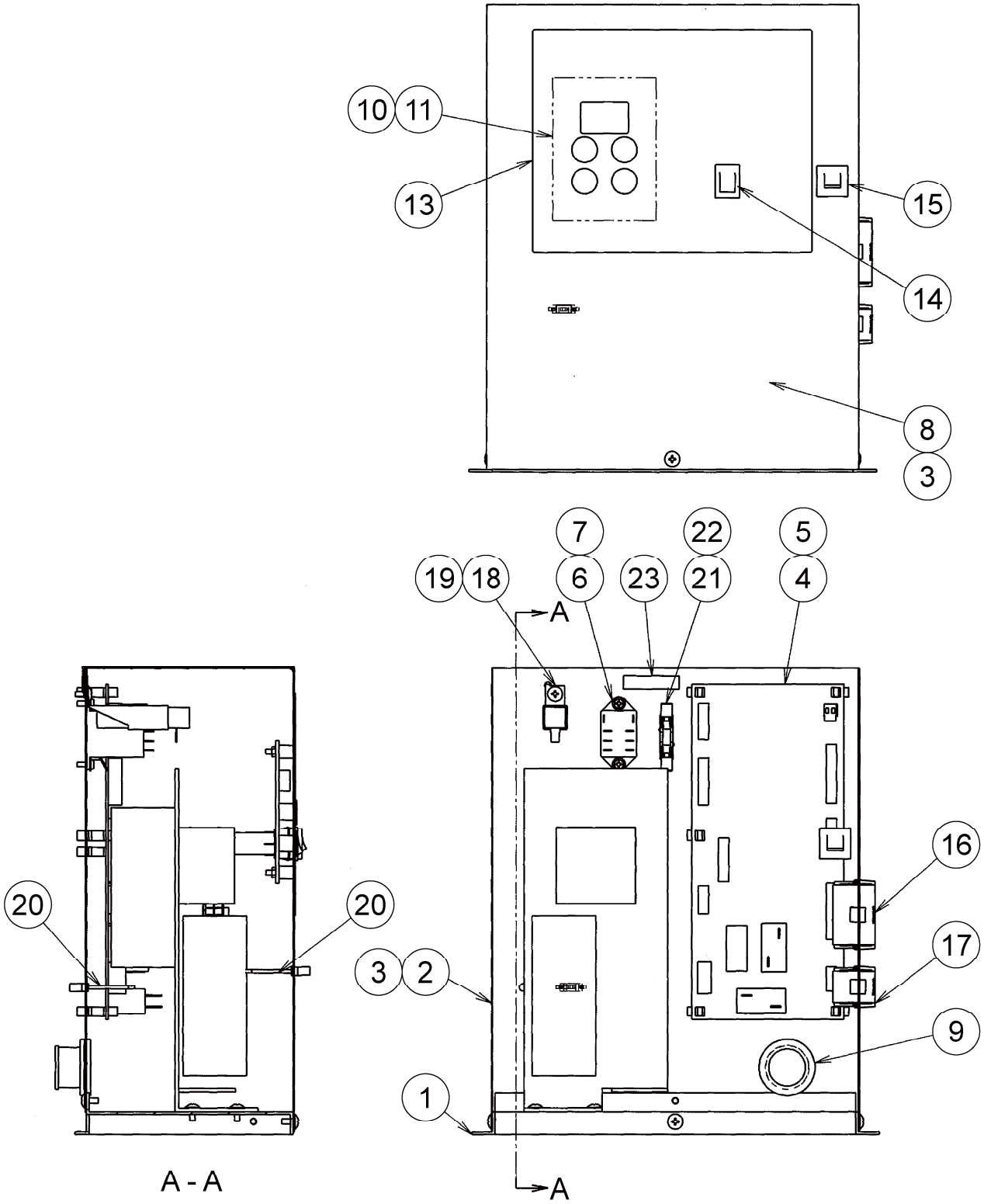

Зип Общепит
vsezip.ru
+7(812)987-08-81

HE

MODEL: **FM-150KE-50, FM-150KE-50-N**

TITLE: **J. CONTROL BOX ASSY**

INDEX NO.	DESCRIPTION	MATERIAL OR MODEL NUMBER	PART NUMBER	REQ'D NUMBER				
				B-1 C-0	C-1			
1	CONTROL BOX (A)		376114M01	1	1			
2	CONTROL BOX (B)		376113M01	1	1			
3	TRUSS HEAD MACHINE SCREW		FST0408F0	4	4			
4	CONTROLLER BOARD - 09CM		P01372-99	1	1			
5	BOARD SUPPORT	KGLS-6S	414929-01	6	6			
6	RELAY	LY2F AC240V	406132-08	1	1			
7	TAPPING SCREW	3x8	431415-01	2	2			
8	COVER A - CONT.BOX		376115G01	1	1			
9	GROMMET		4H2568-01	1	1			
10	SPACER	4EP-9	451658-05	4	4			
11	OPERATION BOARD - 09CM		P01373-01	1	1			
12	NUT		FNH103F0	4	4			
13	CONTROL LABEL		374148L01	1	1			
14	ROCKER SWITCH		460681-01	1	1			
15	PROTECTOR	W28XQIA-10	440972-01	1	1			
16	HARNESS (A)		376106G01	1	1			
17	HARNESS (B)		473845G01	1	1			
18	SUREGE ABSORBOR		436573-02	1	1			
19	TRUSS HEAD MACHINE SCREW	SUS 4x8	FST0408S0	1	1			
20	CLAMP	No.249	427902-03	2	2			
21	FUSE HOLDER		4Y2547-01	1	1			
22	FUSE		451924-02	1	1			
23	LABEL/FUSE		477494L01	1	1			

Зип Общепит
vsezip.ru
+7(812)987-08-81

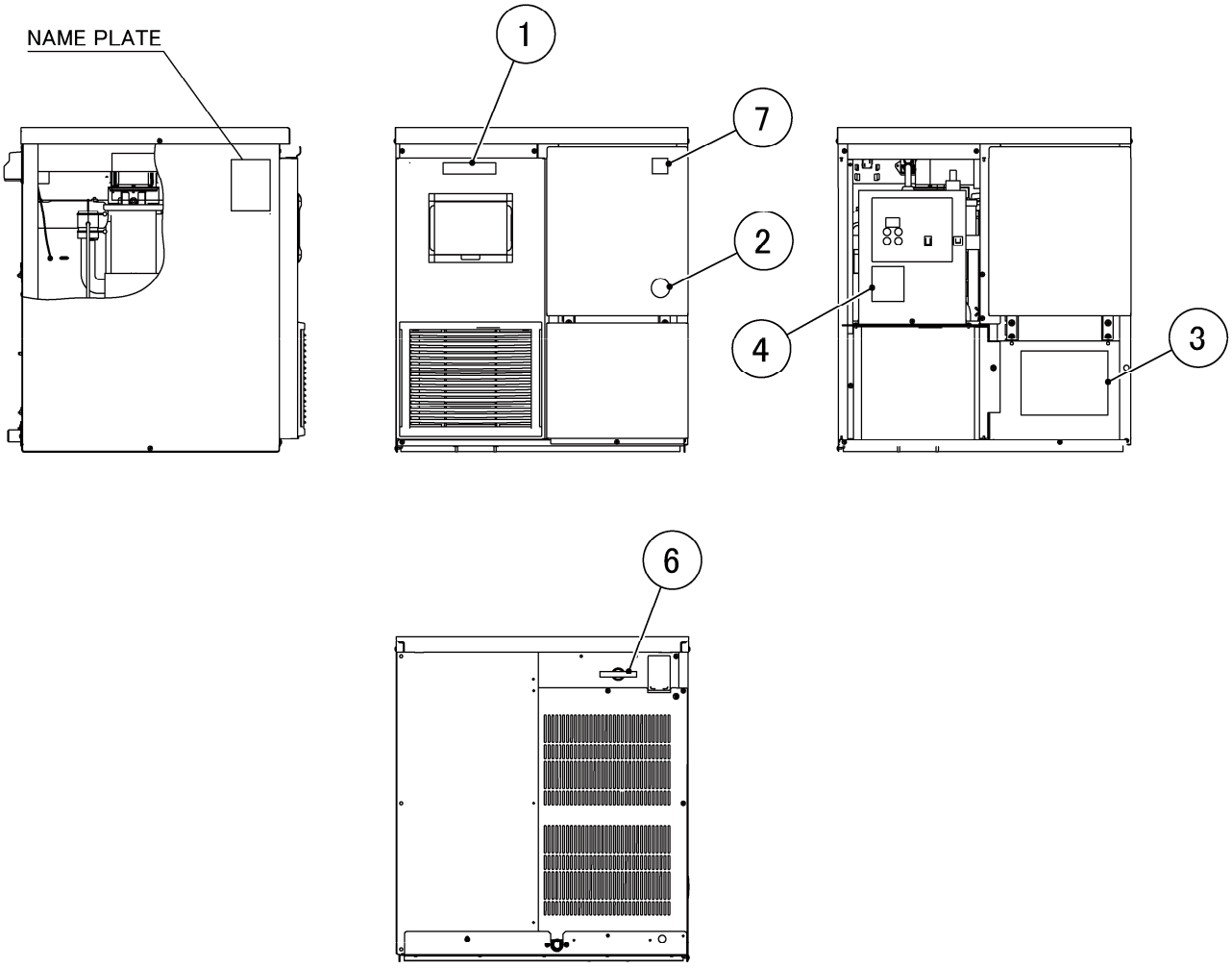

Зип Общепит
vsezip.ru
+7(812)987-08-81

HE

MODEL: FM-150KE-50, FM-150KE-50-N	TITLE: **K. LABEL LOCATION**

INDEX NO.	DESCRIPTION	MATERIAL OR MODEL NUMBER	PART NUMBER	REQ'D NUMBER				
				B-1 C-0	C-1			
1	EMBLEM		340842-01	1	1			
2	LABEL-PENGUIN		468184-01	1	1			
3	WIRING LABEL		261656L01	1	-			
			265042L01		1			
4	CAUTION LABEL - SERVICE		471180L01	1	1			
6	CAUTION-LABEL		452552-01	1	1			
7	LABEL - HACCP		476519L01	1	1			

Зип Общепит
vsezip.ru
+7(812)987-08-81

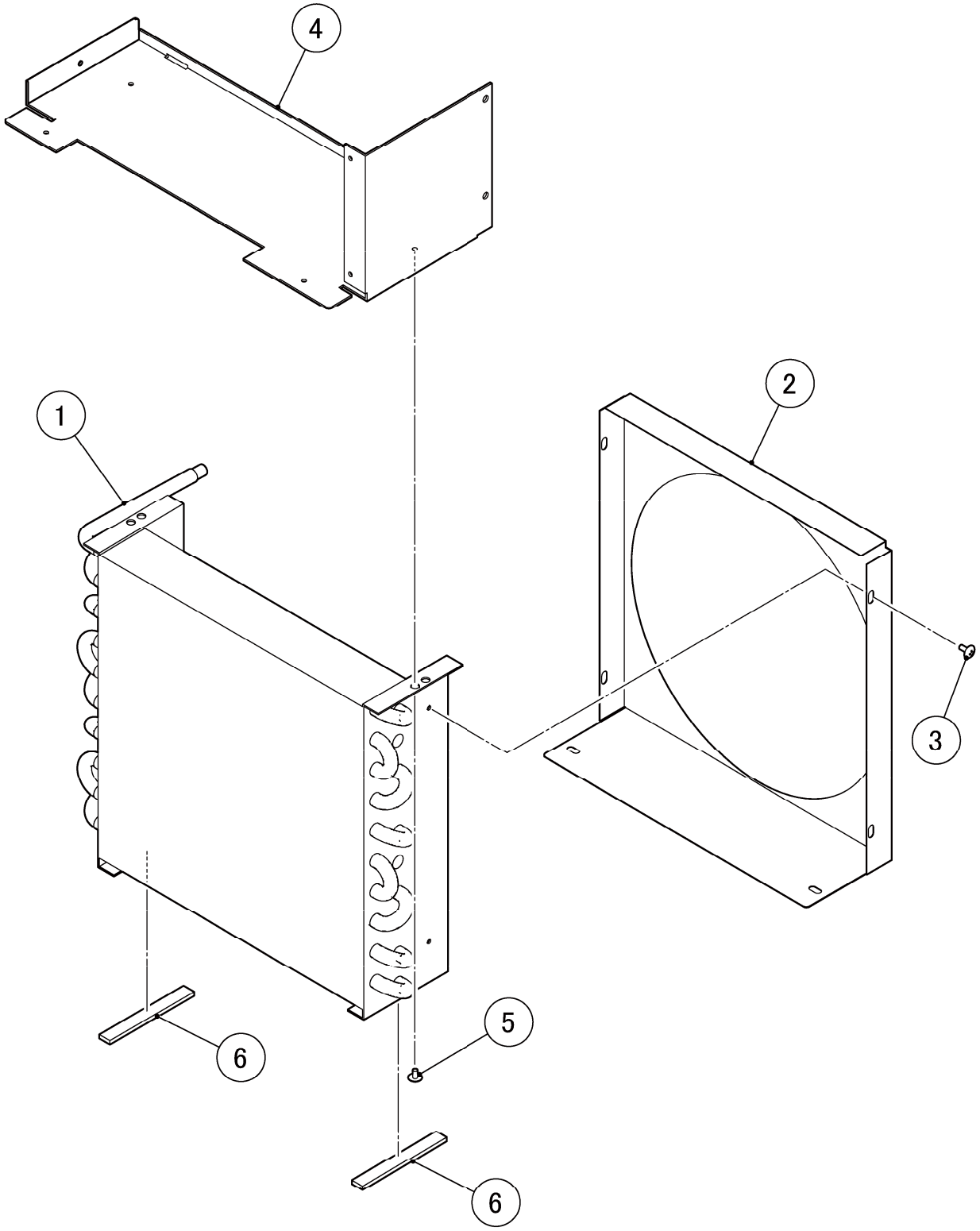

Зип Общепит
vsezip.ru
+7(812)987-08-81

HE

MODEL: **FM-150KE-50, FM-150KE-50-N**

TITLE: **L. CONDENSER ASSY**

INDEX NO.	DESCRIPTION	MATERIAL OR MODEL NUMBER	PART NUMBER	REQ'D NUMBER				
				B-1 C-0	C-1			
1	CONDENSER-AIR COOLED		P03373-01	1	1			
2	SHROUD		376057M01	1	1			
3	TRUSS HEAD TAPPING SCREW T2		FT20408F0	4	4			
4	BRACKET - CONTROL BOX		376108M01	1	1			
5	TRUSS HEAD MACHINE SCREW		FST0406F0	2	2			
6	SOFT TAPE		241780-06	2	2			

Зип Общепит
vsezip.ru
+7(812)987-08-81

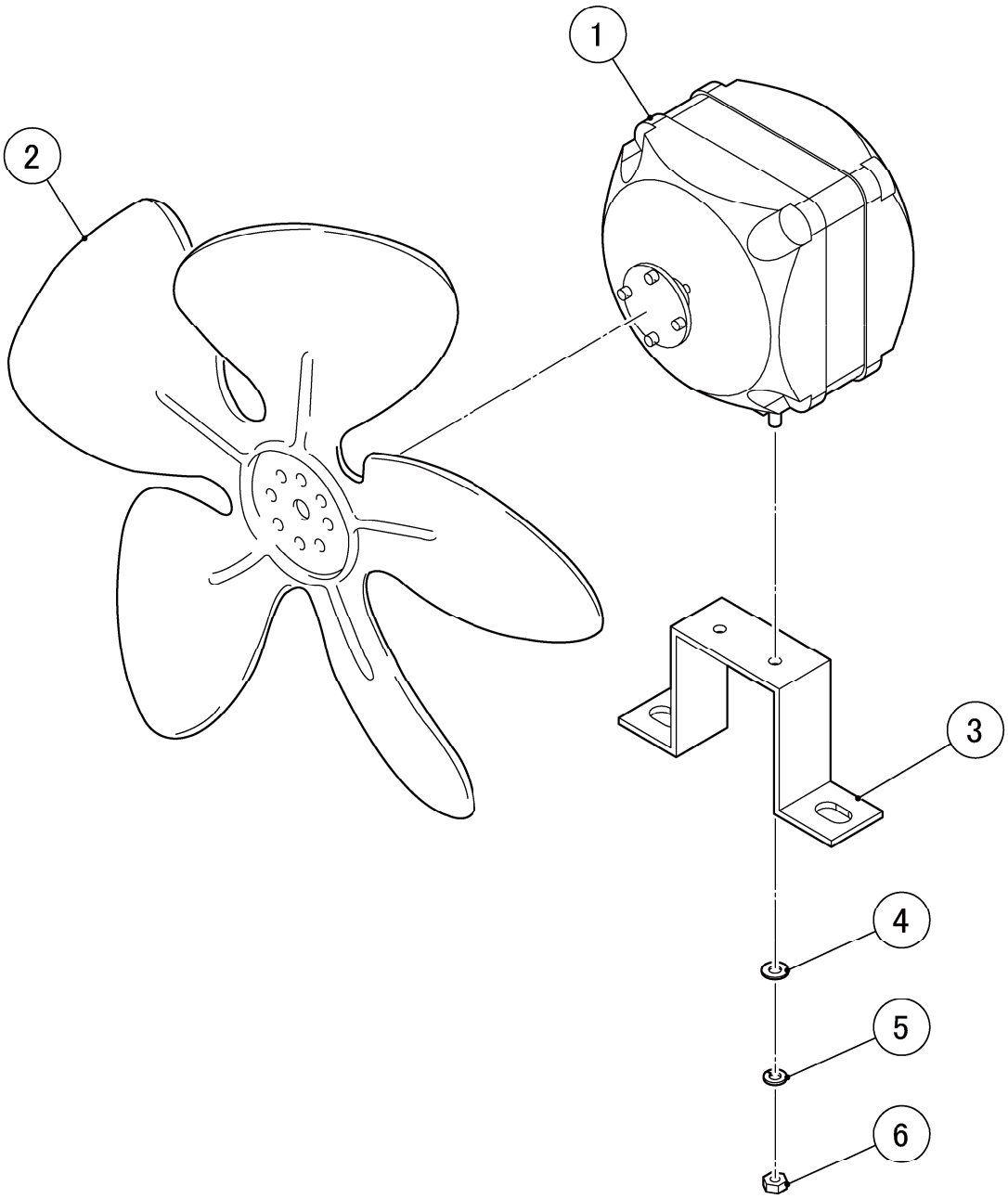

Зип Общепит
vsezip.ru
+7(812)987-08-81

HE

MODEL: **FM-150KE-50, FM-150KE-50-N**

TITLE: **M. FAN MOTOR ASSY**

INDEX NO.	DESCRIPTION	MATERIAL OR MODEL NUMBER	PART NUMBER	REQ'D NUMBER				
				B-1 C-0	C-1			
1	FAN MOTOR	M4Q045-CA03-51	P00022-01	1	1			
2	FAN		451771-01	1	1			
3	BRACKET - FM		451767-01	1	1			
4	FLAT WASHER		FWPL04S0	2	2			
5	SPRING WASHER		FWSP04S0	2	2			
6	NUT		FNH104S0	2	2			

Зип Общепит
vsezip.ru
+7(812)987-08-81

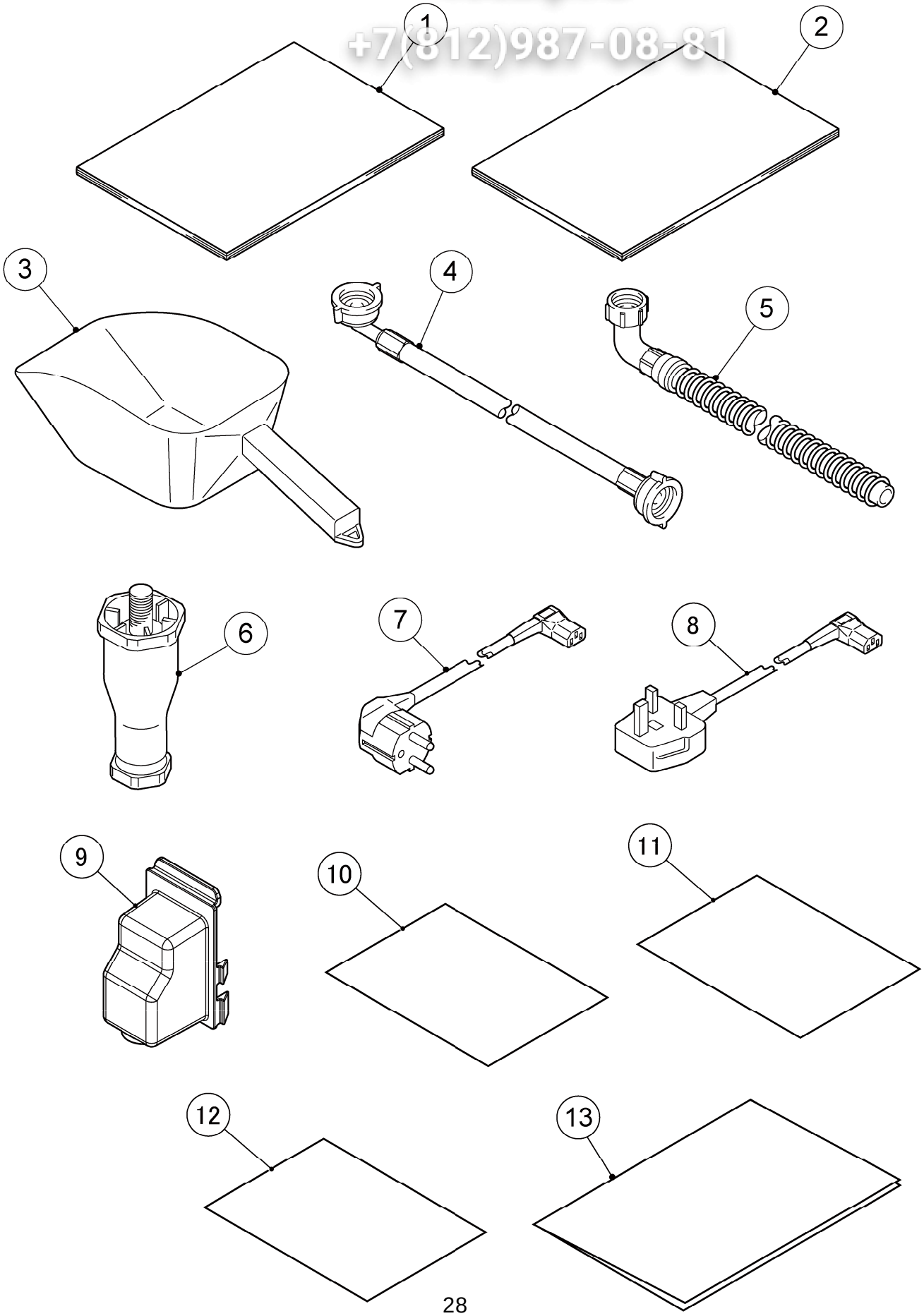

Зип Общепит
vsezip.ru
+7(812)987-08-81

HE

MODEL: FM-150KE-50,
FM-150KE-50-N

TITLE: **N. ACCESSORIES**

INDEX NO.	DESCRIPTION	MATERIAL OR MODEL NUMBER	PART NUMBER	REQ'D NUMBER				
				B-1 C-0	C-1			
1	INSTRUCTION MANUAL		L1F080204	1	1			
2	INSTALLATION MANUAL		L2F080204	1	1			
3	SCOOP		208185-01	1	1			
4	INLET HOSE		P03534-01	1	1			
5	OUTLET HOSE		452365-01	1	1			
6	LEG		462576-01	4	4			
7	POWER CORD		P00240-01	1	1			
8	POWER CORD		P00241-01	1	1			
9	COVER-CONNECTOR		2X0271P01	1	1			
10	PE BAG (STANDARD)		7V90-0012	1	1			
11	POLYETHYLENE BAG (300*450)		7V90-0015	1	1			
12	PE BAG (STANDARD)		7V91-0020	1	1			
13	INSTRUCTION MANUAL		122234L01	1	1			